25 YEARS WARRANTY

Mediterranea Commerciale

WATER DIVISION

Technical catalogue

2011

Technical catalogue
2011

CONVENIENCE
The smooth internal surface of the products makes them **easy to clean and maintain**, while their **lightness** makes them easy to transport and quick to install, with the **cost being much less than** steel, fibreglass or concrete. All this guarantees substantial savings in both time and money.

STRENGTH
Rotational moulding technology allows the production of plastic tanks with **one-piece structures**. The absence of welds, which could weaken parts of the structure subjected to internal stresses, guarantees **high strength and robustness**.

RELIABILITY
Tanks in linear polyethylene are ideal for storing potable water and for numerous other applications. Polyethylene, in fact, is a **material guaranteed atoxic** and as such can also come into contact with foodstuffs.

DURABILITY
The **raw materials** used in the production of the tanks guarantee maximum reliability in terms of resistance to corrosion and oxidation, they also **prevent the formation of algae** and, thanks to the use of **anti-UV additives**, ensure that the product does not deteriorate over time.

VERSATILITY
We manufacture a **vast range** of tanks available in various shapes and capacities, ranging from 50 to 10,000 litres, able to satisfy any space and volume requirements. Furthermore, for particular installations or on request from the customer, it is possible to provide made to **measure holes** and connect the products together to obtain large storage volumes.

INNOVATION
Rotational moulding is used in **numerous sectors**, for example it is possible to manufacture items for agriculture, boats, furnishings, packaging, liquid storage containers (food and otherwise), safety products as well as components for the automobile, construction and thermohydraulic industries.

SAFETY
The **ease of handling** and the lightweight nature of Rototec tanks guarantee absolute safety on-site.

RESPECT FOR THE ENVIRONMENT
The linear high density polyethylene used for the production of the tanks is a **100% recyclable** raw material.

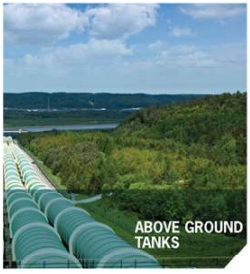

TECHNICAL CHARACTERISTICS

Thanks to rotational moulding technology and the chemical-physical–mechanical characteristics of linear high density polyethylene (LLDPE), the above ground tanks possess the ideal characteristics for the problem-free storage of large volumes of liquids. Polyethylene, in fact, is **totally atoxic** and does not foster the growth of algae in the fluids contained in the tanks, thus making the tanks ideal for storing potable water and other foodstuffs. Furthermore, linear polyethylene also supports sudden changes in temperature (from -20 to + 80 °C) and is **inert** in the presence of chemical and physical atmospheric agents. For these reasons, there are no material oxidation or corrosion problems that would prejudice the mechanical characteristics and impermeability of the tanks. These characteristics are also guaranteed by the fact that rotational moulding allows **one-piece** tanks to be produced, i.e. free of welds that could weaken parts of the tanks subjected to internal stresses. Furthermore, while possessing the same characteristics as other materials (cement, fibreglass, metal), tanks in polyethylene are much **lighter** and as such transport, installation and maintenance are extremely simple and economic. Finally, polyethylene tanks **can be bored** when the need arises, for example when connecting tanks together, installing inlet/outlet pipes, overflows, etc.

We supplies a wide range of tank models for outdoor use of capacities ranging from 300 to 10000 litres. The various forms of the tanks are designed to create storage facilities even in locations where installation space is restricted (e.g. cellars, attics...). Thanks to the installation of **flanged joints or brass pipe unions** mounted on the appropriate flat areas on the tanks, the Verticale, Cisterna and Panettone model tanks can be connected together to provide storage volumes of up to 50000 litres (see chapter MODULARITY). Each tank is equipped with a threaded **inspection cover**, and many models are fitted with **discharge and full drain outlet holes**. The standard colour of outdoor tanks is blue. Other colours are also available on request, such as Green, Black, Terracotta and Marbled Grey. Finally, on request, above ground tanks can also be equipped with the appropriate **pumps** for delivering the stored water at the flow rates, pressures and heads needed for the various applications

The data reported in this chapter is purely indicative. ROTOTEC reserves the right to modify or improve the products illustrated without prior notification. ROTOTEC can make its technical office available for the design and realisation of customised products and/or for satisfying the particular needs of its clientele. Dimensional tolerance ± 3%, capacity tolerance ± 5%.

APPLICATIONS

The characteristics previously mentioned render the above ground tanks ideal for:
- **Storing potable water or other liquid foodstuffs** in areas either outside or inside residential properties;
- **Creating large volumes of stored water** for fire-fighting, washing or irrigation plants;
- **Creating lift stations** for pumping water to higher levels;
- **Collecting and storing rainwater** for eventual re-use for irrigation, washing hardstandings, filling toilet cisterns, etc...

WARNINGS

In order to ensure that the characteristics of the tanks remain unaltered over time, that the stored substances do not deteriorate and that is guarantee to remain valid (for 25 years against full-depth corrosion) the following instructions must be carefully followed:
- **The above ground tanks must not, under any circumstances, be installed underground;**
- **Prior to installation, carefully check the integrity of the tanks** and tightness of the gaskets;
- Do not install the tanks near to sources of heat;
- **The tanks must be positioned on a flat stable surface;**
- When installing the tanks, to prevent the formation of algae, make sure that no light can filter in;
- Use flexible hoses when connecting to the water system in order to prevent stresses during tank filling and emptying;
- Do not leave the tank without its cover for any length of time;
- In the case of rainwater storage, it is advisable to install a leaf filter chamber upstream of the tank to prevent a build-up of grit, silt, leaves, etc inside the tank;
- **For storing fluids not expressly indicated in this catalogue (see page 68), contact the technical office;**
- Place the tanks in easily reachable locations and avoid constructing parts in brickwork that could interfere with replacement or maintenance operation;
- When installing a pump, internally or externally, fit a suitable sized vent on the tank to prevent the formation of a vacuum when the pump is running.

Type
Above ground tank

Applications
Storing foodstuffs - Water, oil, wine

Volumes
From 50 to 10000 litres

Installation Placed directly on a flat supporting surface

Available colours:

standard	on request
blue	grey
	green
	terracotta

Item	Volume lt.	Ø cm	Height cm	Ø cover cm	Inlet	Outlet	Full drain	Lifting eye	Threaded insert dimensions cm.		
									A	B	Int.
V 50	50	43	43	21	-	-	¾"	-	4,5	-	-
V150	150	60	70	21	¾"	-	¾"	-	4	-	-
V 300	300	63	110	21	¾"	-	¾"	-	4	-	-
V 500	500	68	152	30	¾"	1"	¾"	-	9	4	6
V 1000	1000	85	193	30	1"	1"	¾"	3	9	4	8
V 2000	2000	115	210	40	1"	1"	¾"	3	10	5	9
V 3000	3000	135	230	40	1"	1"	¾"	3	11	6	10
V 10000	10000	246	246	52	-	-	-	4	-	-	-

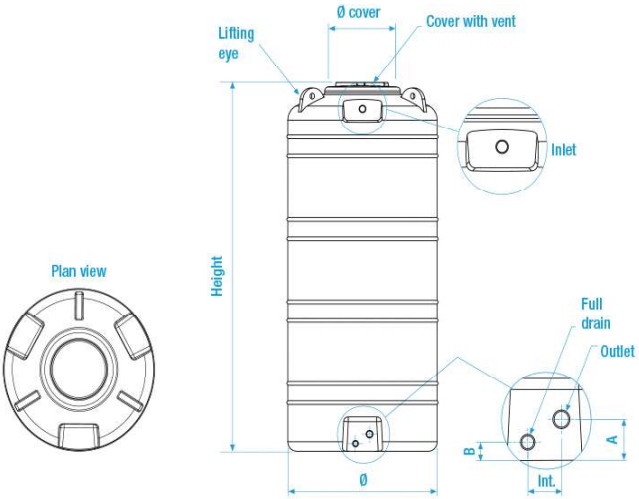

Panettone [ABOVE GROUND TANKS

Type
Above ground tank

Applications
Storing foodstuffs - Water, oil, wine

Volumi
From 500 to 7500 litres

Installation Placed directly on a flat supporting surface which is also suitable for transport

Available colours:

standard	on request
blue	grey
	green
	terracotta

Item	Volume lt.	Ø cm	Height cm	Ø cover cm	Inlet	Outlet	Full drain	Lifting eye	Threaded insert dimensions cm.		
									A	B	C
P500	538	100	80	21	¾"	¾"	-	-	5	-	-
P1000	1040	120	105	30	1"	1"	¾"	3	9	5	11
P2000	2075	150	133	40	1"	1"	¾"	3	9	5	11
P3000	3105	183	135	40	1"	1"	¾"	3	10	6	12
P5000	4905	225	135	40	1"	1 ½"	1"	3	10	6	12
P7500	7800	225	210	40	1"	1 ½"	1"	3	10	6	12

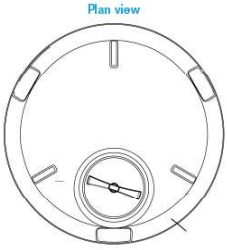

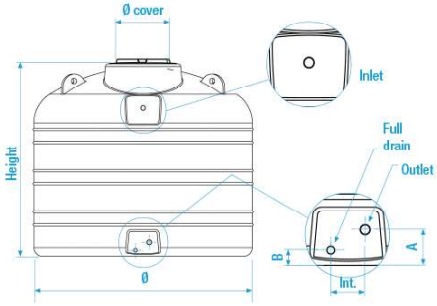

Type
Above ground tank

Applications
Storing foodstuffs - Water, oil, wine

Volumes
From 300 to 5000 litres

Installazione Placed directly on a flat supporting surface

Available colours:

standard	on request
blue	grey
	green
	terracotta

Item	Volume lt.	Length cm	Width cm	Height cm	Ø cover cm	Inlet	Outlet	Full drain	Lifting eye	Threaded insert dimensions cm.		
										A	B	Int.
C300	300	121	57	66	21	¾"	-	¾"	-	-	4,2	-
C500	565	120	80	83	21	¾"	-	¾"	-	-	4	-
C1000	1020	140	100	109	30	1"	1"	¾"	-	6,8	4,5	15
C1500	1665	170	115	122	40	1"	1"	¾"	2	7	4	11
C2000	2200	190	125	132	40	1"	1"	¾"	2	7	4	12
C3000	3260	210	145	152	40	1"	1"	¾"	2	7	4	12
C5000	5000	220	173	192	52	-	-	-	2	-	-	-

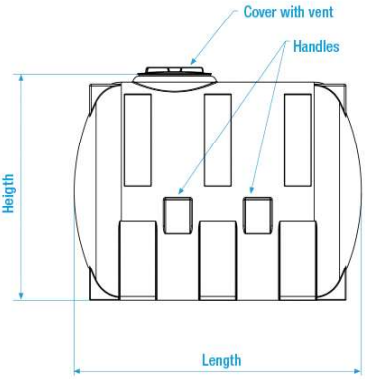

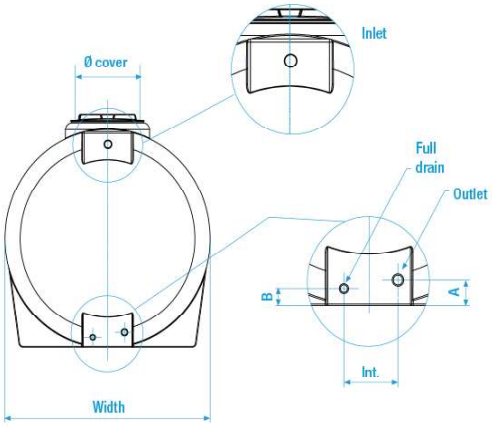

Jolly [ABOVE GROUND TANKS

Type
Above ground tank

Applications
Storing foodstuffs - Water, oil, wine

Volumi
From 1000 to 2000 litres

Installazione Easy to position and handle, designed for narrow passages, cellars, basements, placed directly on a flat supporting surface

Available colours:

standard	on request
blue	grey
	green
	terracotta

Item	Volume lt.	Length cm	Width cm	Height cm	Ø cover cm	Inlet	Outlet	Full drain	Lifting eye	Threaded insert dimensions cm.		
										A	B	Int.
J 1000	1000	150	68	145	30	1"	1"	¾"	-	6	6	8
J 2000	2000	233	68	190	30	1"	1"	¾"	-	6	6	8

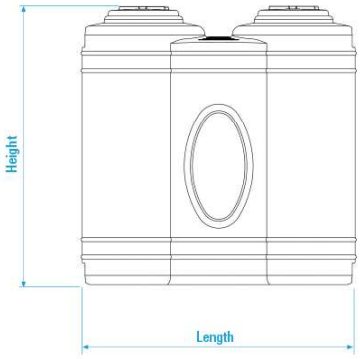

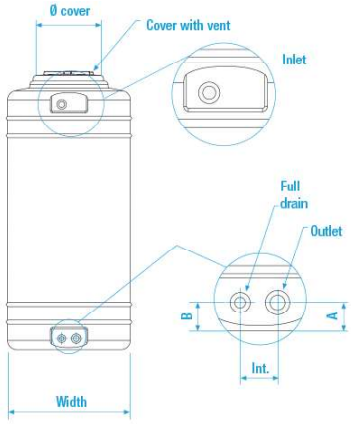

Type
Above ground tank

Applications
Storing foodstuffs - Water, oil, wine

Volumes
From 500 to 1000 litres

Installation Placed directly on a flat supporting surface

Available colours:

standard	on request
blue	grey
	green
	terracotta

Item	Volume lt.	Length cm	Width cm	Height cm	Ø cover cm	Inlet	Outlet	Full drain	Lifting eye	Threaded insert dimensions cm.		
										A	B	Int.
RV 500	500	99	65	105	21	-	1"	¾"	-	6,6	4,6	10
RV 1000	1000	139	80	115	21	-	1"	¾"	-	6,8	4,8	10,5

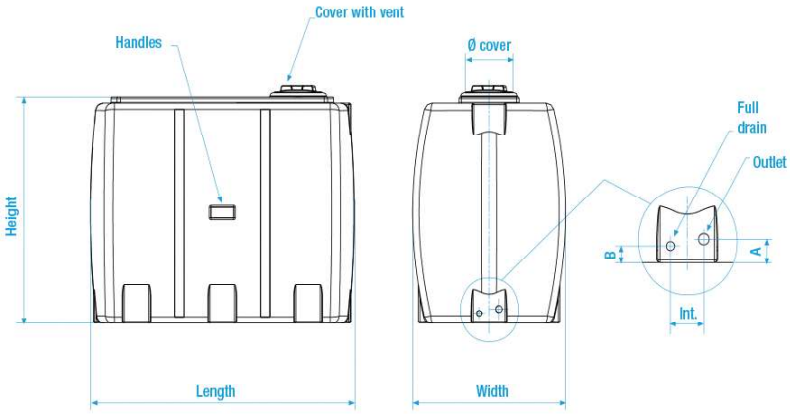

Box [ABOVE GROUND TANKS

Type
Above ground tank

Applications
Storing foodstuffs - Water, oil, wine

Volumes
From 300 to 500 litres

Installation Placed directly on a flat supporting surface

Available colours:

standard	on request
blue	grey
	green
	terracotta

Item	Volume lt.	Length cm	Width cm	Height cm	Ø cover cm	Inlet	Outlet	Full drain	Lifting eye	Threaded insert dimensions cm.		
										A	B	Int.
B 300	290	80	55	80	21	-	1"	¾"	-	3,8	3,8	10
B 500	500	80	55	130	21	-	1"	¾"	-	3,8	3,8	10

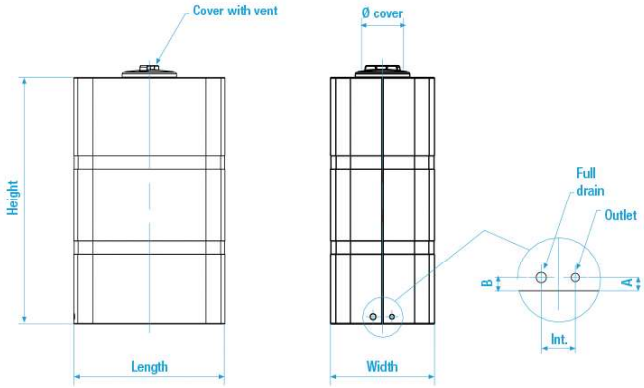

Type
Above ground tank

Applications
Storing foodstuffs - Water, oil, wine

Volumes
From 300 to 800 litres

Installazione Placed directly on a flat supporting surface, ideal for confined spaces

Available colours:

standard	on request
blue	grey
	green
	terracotta

Item	Volume lt.	Length cm	Width cm	Height cm	Ø cover cm	Inlet	Outlet	Full drain	Lifting eye	Threaded insert dimensions cm.		
										A	B	Int.
S 300	300	98	46	105	21	-	¾"	-	-	3,8	-	-
S 800	750	122	67	130	30	-	1"	-	-	5,6	-	-

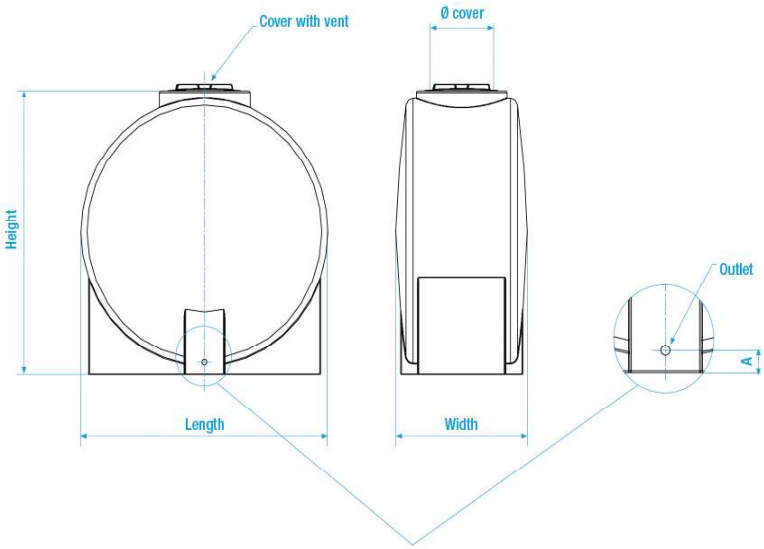

Sottotetto [ABOVE GROUND TANKS

Type
Above ground tank

Applications
Storing foodstuffs - Water, oil, wine

Volumes
300 litres

Installation Placed directly on a flat supporting surface, ideal for spaces with reduced headroom

Available colours:

standard	on request
blue	grey
	green
	terracotta

Item	Volume lt.	Length cm	Width cm	Height cm	Ø cover cm	Inlet	Outlet	Full drain	Lifting eye	Threaded insert dimensions cm.		
										A	B	Int.
ST 300	300	160	50	42	21	-	1"	¾"	-	5,2	3,6	7

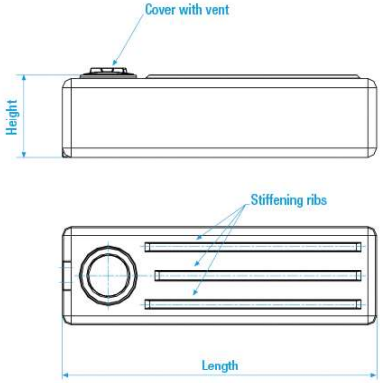

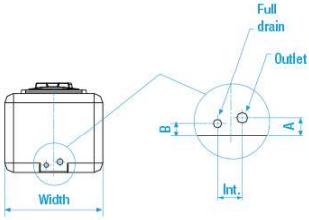

Type
Above ground tank

Applications
Storing foodstuffs - Water, oil, wine

Volumes
500 litres

Installation Placed directly on a flat supporting surface

Available colours:

standard	on request
blue	grey
	green
	terracotta

Item	Volume lt.	Length cm	Width cm	Height cm	Ø cover cm	Inlet	Outlet	Full drain	Lifting eye	Threaded insert dimensions cm.		
										A	B	Int.
SS 500	500	133	76	80	21	-	1"	¾"	-	5,2	3,6	7

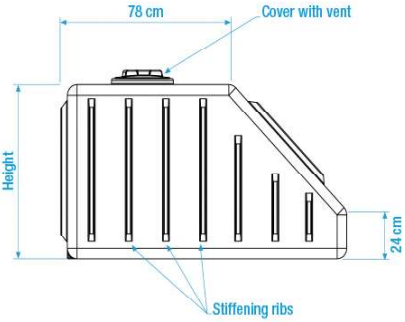

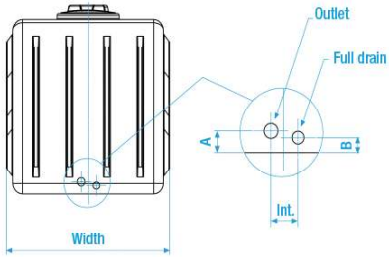

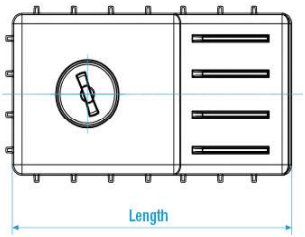

Cubo [ABOVE GROUND TANKS

Type
Above ground tank

Applications
Storing foodstuffs - Water, oil, wine

Volumes
From 300 to 500 litres

Installation Placed directly on a flat supporting surface

Available colours:

standard	on request
blue	grey
	green
	terracotta

Item	Volume lt.	Length cm	Width cm	Height cm	Ø cover cm	Inlet	Outlet	Full drain	Lifting eye	Threaded insert dimensions cm.		
										A	B	Int.
Q 300	250	71	71	51	21	-	1"	¾"	-	4,6	3,2	9,6
Q 500	440	71	71	88	21	-	1"	¾"	-	4,6	3,2	9,5

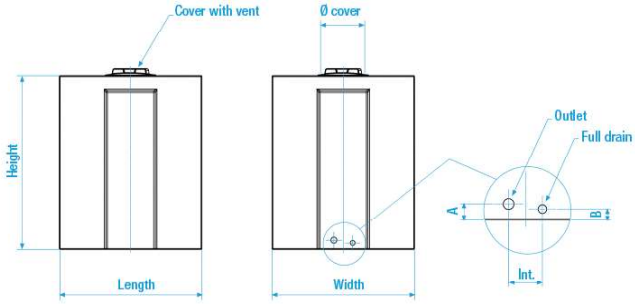

Fitting the brass pipe union

1. PREPARING THE HOLE

Use a hole saw to cut a hole of diameter the same as the external diameter of the union in the appropriate flat area of the tank. The hole must be made at the centre of the flat area at a height of approximately 10 cm from the bottom of the tank. A suitable wooden spacer will make this operation easier.

2. INSTALLING THE PIPE UNION

Fit the inner gasket onto the union then insert the union in the hole from the inside of the tank. If the union is difficult to insert, hit it lightly with a rubber mallet. At this point, place the outer gasket on the union and then screw on the ring nut.

3. TIGHTENING THE PIPE UNION

Screw the ring nut on the union. Carefully tighten the nut using a chain pipe wrench or similar. Finally, clean the inside of the tank and union, removing any fragments of polyethylene produced during the assembly phase.

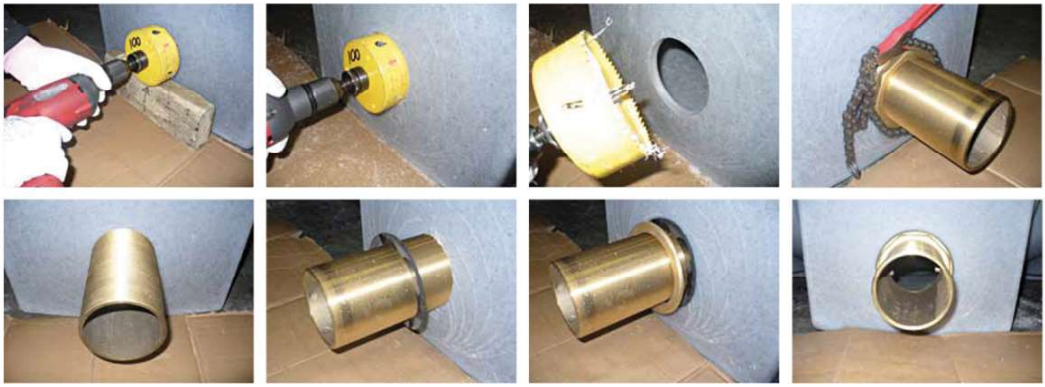

TECHNICAL CHARACTERISTICS

Thanks to rotational moulding technology and the chemical-physical–mechanical characteristics of linear high density polyethylene (LLDPE), the underground tanks possess the ideal characteristics for the problem-free storage of large volumes of liquids. Polyethylene, in fact, is **totally atoxic** and does not foster the growth of algae in the fluids contained in the tanks, thus making the tanks ideal for storing potable water and other foodstuffs. Furthermore, linear polyethylene also supports sudden changes in temperature (from -20 to + 80 °C) and is **inert** in the presence of chemical and physical atmospheric agents. For these reasons, there are no material oxidation or corrosion problems that would prejudice the mechanical characteristics and impermeability of the tanks. These characteristics are also guaranteed by the fact that rotational moulding allows **one-piece** tanks to be produced, i.e. free of welds that could weaken parts of the tanks subjected to internal stresses. Furthermore, while possessing the same characteristics as other materials (cement, fibreglass, metal), tanks in polyethylene are much **lighter** and as such transport, installation and maintenance are extremely simple and economic. Finally, polyethylene tanks **can be bored** when the need arises, for example when connecting tanks together, installing inlet/outlet pipes, overflows, etc.

We supply two models of tanks for underground installation, the only difference being their shape and capacity: the Cisterna model can store from 1000 to 10000 litres, while the Panettone model has a capacity ranging from 3000 to 10000 litres. Thanks to the flanged joints or brass pipe unions mounted on the appropriate flat areas, the tanks of both models can be connected together to obtain storage volumes of up to 50000 litres (see chapter MODULARITY). Each tank is equipped with a threaded or hinged inspection cover on which it is possible to install extensions when the top of the tank is below ground level. Finally, on request, the tanks can be equipped with the appropriate pumps for delivering the stored water at flow rates, pressures and heads needed for the various applications.

The data reported in this chapter is purely indicative, and we reserves the right to modify or improve the products illustrated without prior notification. We can make its technical office available for the design and realisation of customised products and/or for satisfying the particular needs of its clientele. Dimensional tolerance ± 3%, capacity tolerance ± 5%.

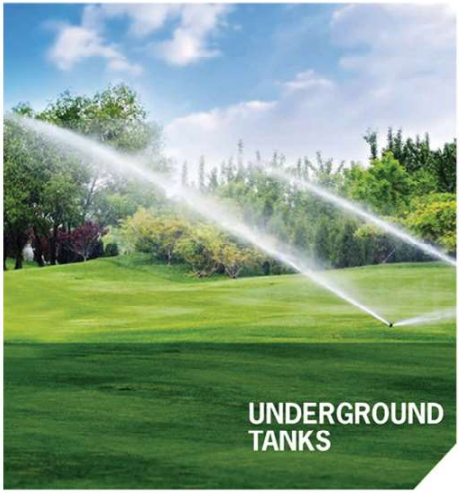

APPLICATIONS

The characteristics previously mentioned render the underground tanks ideal for:
- **Storing potable water** or other liquid foodstuffs;
- **Creating large volumes of stored water** for fire-fighting, washing or irrigation plants;
- **Creating lift stations** for pumping water to higher levels;
- **Collecting and storing rainwater** for eventual re-use for irrigation, washing hardstandings, filling toilet cisterns, etc…

WARNINGS

In order to ensure that the characteristics of the underground tanks remain unaltered over time, that the stored substances do not deteriorate and that is guaranteed to remain valid (for 25 years against full depth corrosion) the following instructions must be carefully followed:
- **The underground tanks must not, under any circumstances, be installed above ground;**
- **Prior to installation, carefully check the integrity of the tanks** and tightness of the gaskets;
- Do not install the tanks near to sources of heat;
- The tanks must be positioned on a flat stable surface. Special care must be taken in areas characterised by ground instability. **When positioning the tank, carefully follow the under ground installation instructions supplied (see Under ground installation);**
- When installing the tanks, to prevent the formation of algae, make sure that no light can filter in;
- Use flexible hoses when connecting to the water system in order to prevent stresses during tank filling and emptying;
- Do not leave the tank without its cover for any length of time;
- In the case of rainwater storage, it is advisable to install a leaf filter chamber upstream of the tank to prevent a build-up of grit, silt, leaves, etc inside the tank;
- **For storing fluids not expressly indicated in this catalogue (see page 68), contact the technical office.**

N.B.: Underground installation instructions on page 63

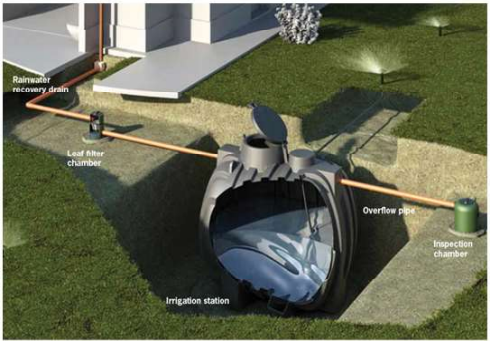

Underground tank Cisterna

Water division

10700 / 5700 / 3000 litres

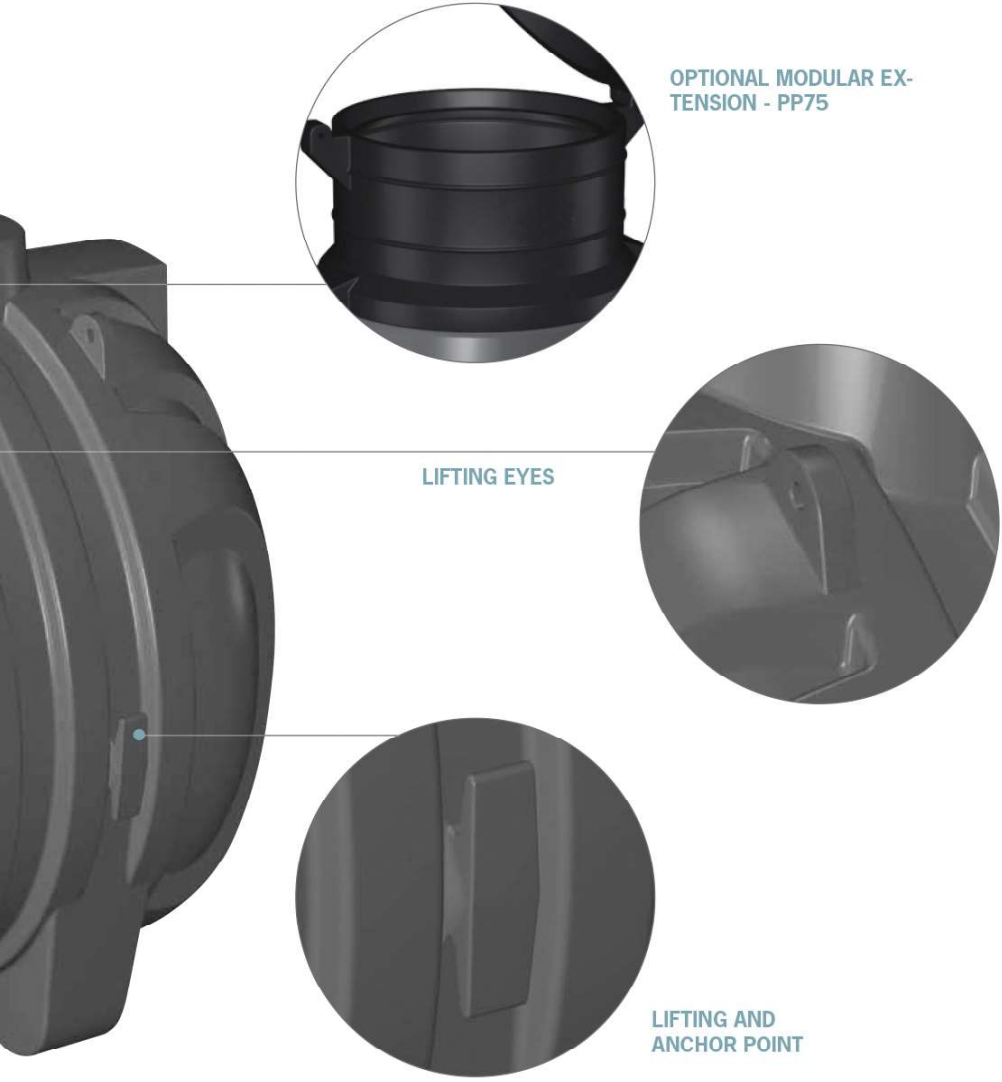

Type
Underground tank

Applications
Potable water storage, rainwater recovery

Volumes
10700 litres

Installation
See chapter "Underground installation instructions"

Available colours:

standard
- black
- marbled grey

Optional modular extension PP75

Item	Ø cm	Height cm	Ø cover cm
PP 75	75	43	63

Item	Volume lt.	Length cm	Width cm	Height cm	Ø cover cm	Inlet	Outlet	Full drain	Extension	Lifting eye
CI 10700	10700	278	243	258	63	-	-	-	PP 75	4

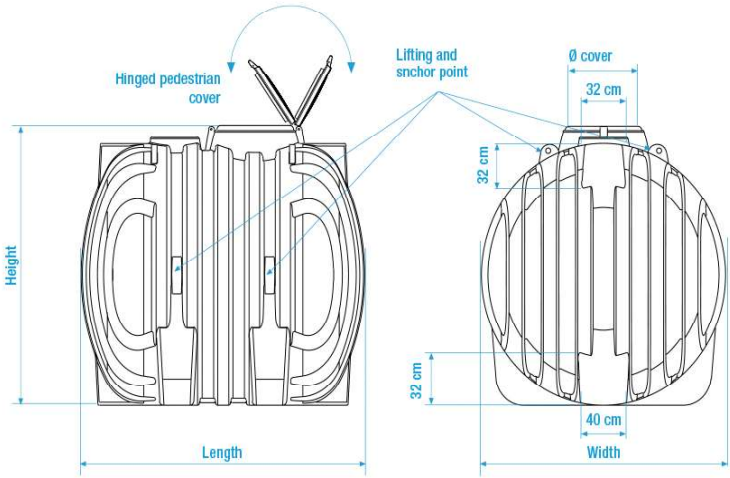

Cisterna CI 5700 [CORRUGATED UNDERGROUND TANKS

Type
Underground tank

Applications
Potable water storage, rainwater recovery

Volumes
5700 litries

Installation
See chapter "Underground installation instructions"

Available colours:

standard
- black
- marbled grey

Optional modular extension PP75

Item	Ø cm	Height cm	Ø cover cm
PP 75	75	43	63

Item	Volume lt.	Length cm	Width cm	Height cm	Ø cover cm	Inlet	Outlet	Full drain	Extension	Lifting eye
CI 5700	5700	242	192	210	63	-	-	-	PP 75	4

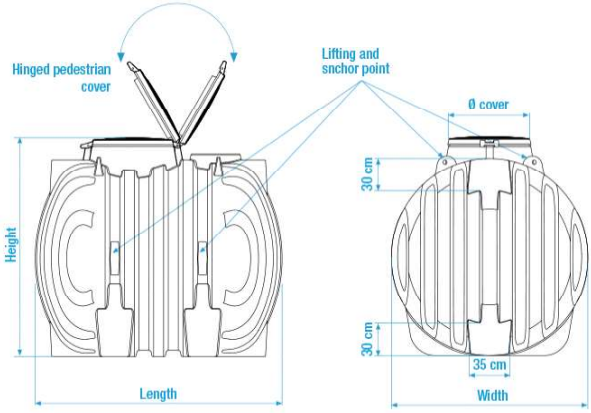

Type
Underground tank

Applications
Potable water storage, rainwater recovery

Volumes
3000 litres

Installation
See chapter "Underground installation instructions"

Available colours:

standard
- black
- marbled grey

Optional modular extension PP75

Item	Ø cm	Height cm	Ø cover cm
PP 75	75	43	63

Item	Volume lt.	Length cm	Width cm	Height cm	Ø cover cm	Inlet	Outlet	Full drain	Extension	Lifting eye
CI 3000	3100	209	150	172	63	-	-	-	PP 75	4

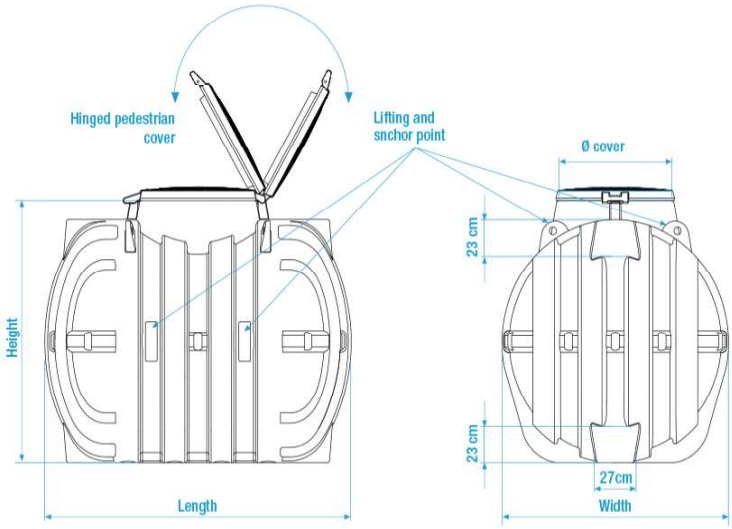

Modularity

These tanks can be connected together to provide very high storage capacities (40 – 50 m³). The tanks can be connected in series or in parallel using flanged joints. These joints can then be easily connected to Tees, elbows or polyethylene pipes using electro-welded couplings.

Tanks connected in series

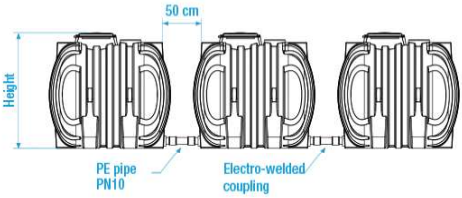

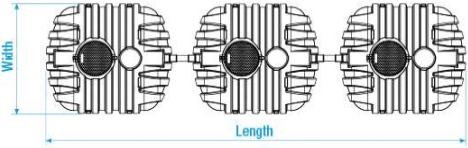

Storage volume lt	N° of tanks	N° of flanged joints	Length m	Width m	Height m
20000	2	2	~6,0	2,43	2,58
30000	3	4	~9,3	2,43	2,58
40000	4	6	~12,6	2,43	2,58
50000	5	8	~15,9	2,43	2,58

Tanks connected in parallel

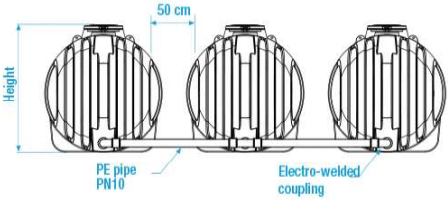

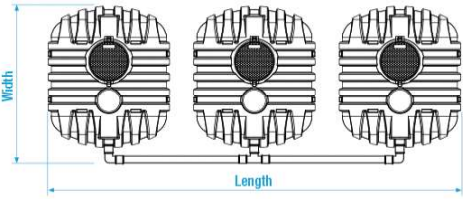

Storage volume lt	N° of tanks	N° of 90° elbows	N° of tee pipes	N°of flanged joints	Length m	Width m	Height m
20000	2	2	0	2	~ 5,4	2,78	2,58
30000	3	2	1	3	~ 8,3	2,78	2,58
40000	4	2	2	4	~ 11,2	2,78	2,58
50000	5	2	3	5	~ 14,1	2,78	2,58

Underground tank Canotto

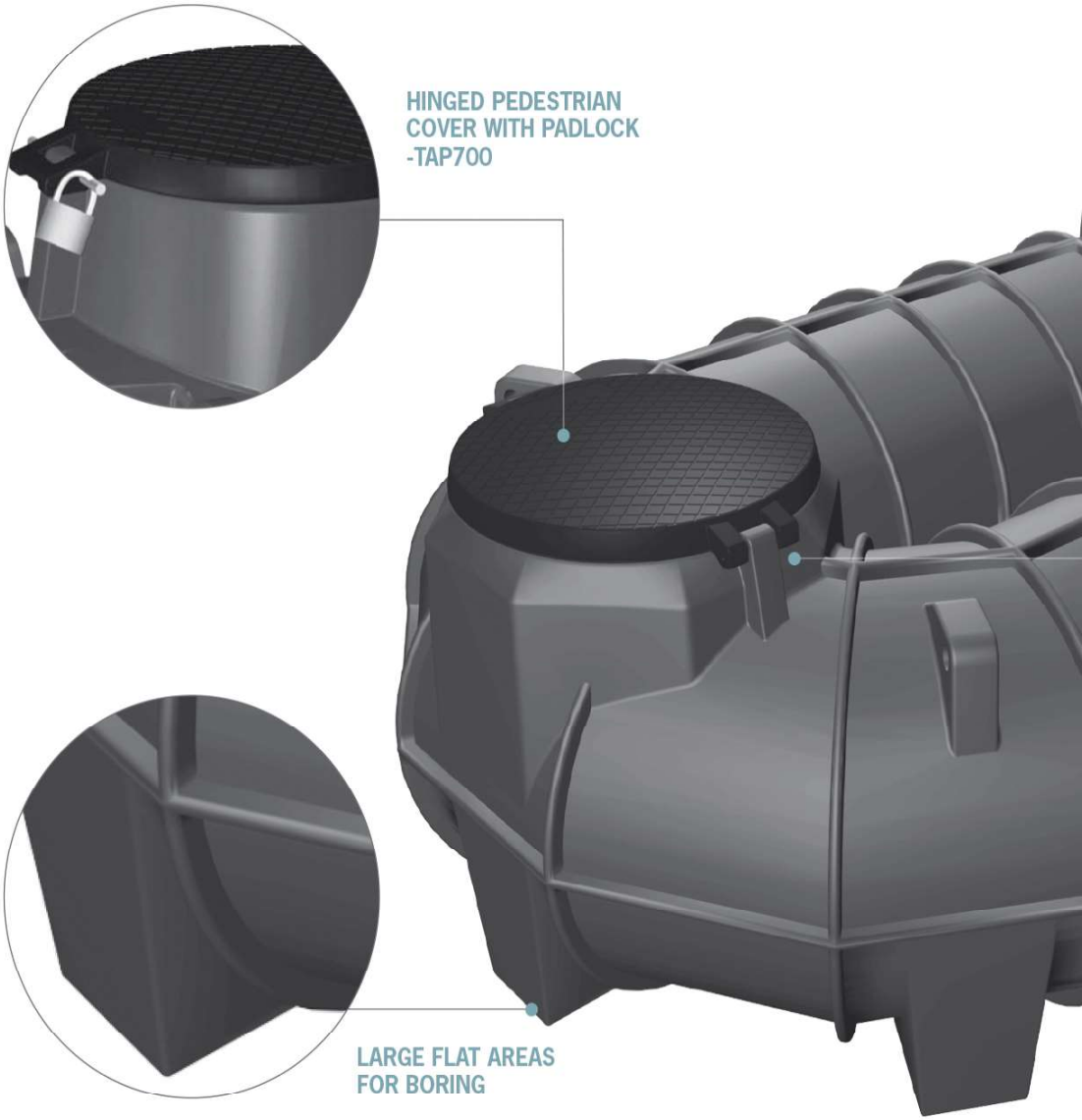

3500 / 5300 litres

SIMPLIFIES INSTALLATION OPERATIONS

PERFECT FOR ROCKY GROUND

IDEAL FOR NOT VERY DEEP EXCAVATION

Canotto CI 3500 [CORRUGATED UNDERGROUND TANK

Type
Underground tank

Applications Ideal for storing large volumes of water in the case of not very deep excavations or rocky ground. Makes excavation easy using small size earth moving equipment (mini excavators, compact excavators)

Volumes 3500 litres

Installation See chapter "Underground installation instructions"

Available colours:

standard
- black
- marbled grey

Optional modular extension PP75

Item	Ø cm	Height cm	Ø cover cm
PP 75	75	43	63

Item	Volume lt.	Length cm	Width cm	Height cm	Ø cover cm	Inlet	Outlet	Full drain	Extension	Lifting eye
CI 3500	3500	249	241	123	63	-	-	-	PP 75	4

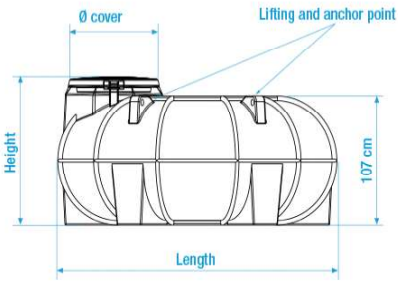

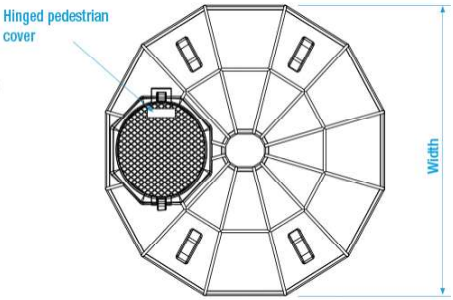

Canotto CI 5300 [CORRUGATED UNDERGROUND TANK

Type
Underground tank

Applications Ideal for storing large volumes of water in the case of not very deep excavations or rocky ground. Makes excavation easy using small size earth moving equipment (mini excavators, compact excavators)

Volumes 5300 litres

Installation See chapter "Underground installation instructions"

Available colours:

standard
- black
- marbled grey

Optional modular extension PP75

Item	Ø cm	Height cm	Ø cover cm
PP 75	75	43	63

Item	Volume lt.	Length cm	Width cm	Height cm	Ø cover cm	Inlet	Outlet	Full drain	Extension	Lifting eye
CI 3500	5300	365	241	123	63	-	-	-	PP 75	4

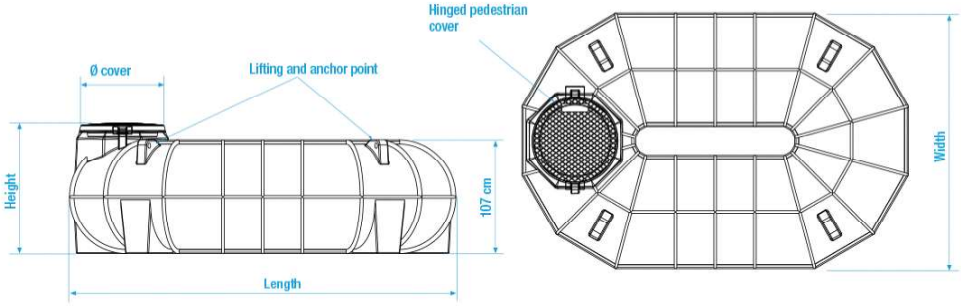

Type
Underground tank

Applications
Potable water storage, rainwater recovery

Volumes
From 3000 to 10.000 litres

Installation
See chapter "Underground installation instructions"

Available colours:

standard
- black
- marbled grey

Optional modular extension PP75

Item	Ø cm	Height cm	Ø cover cm
PP 75	75	43	63

Item	Volume lt.	Ø cm	Height cm	Ø cover cm	Inlet	Outlet	Full drain	Extension	Lifting eye
NPI 3000	3050	171	165	63	-	-	-	PP 75	4
NPI 4000	4050	171	215	63	-	-	-	PP 75	4
NPI 8000	7800	227	275	63	-	-	-	PP 75	4
NPI 10000	9800	227	300	63	-	-	-	PP 75	4

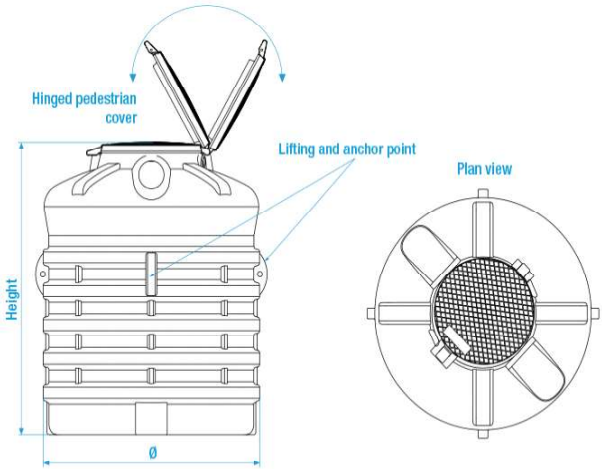

Cisterna [SMOOTH UNDERGROUND TANKS

Type
Underground tank

Applications
Potable water storage, rainwater recovery

Volumes
From 1000 to 2000 litres

Installation
See chapter "Underground installation instructions"

Available colours:

standard
- black
- marbled grey

Item	Volume lt.	Length cm	Largh. cm	Height cm	Ø cover cm	Inlet	Outlet	Full drain	Lifting eye	Extension	Threaded insert dimensions cm.		
											A	B	Int.
CI1000	1020	140	100	109	30	1"	1"	¾"	-	PP 45	6,8	4,5	15
CI1500	1665	170	115	122	40	1"	1"	¾"	2	PP 45	7	4	11
CI2000	2200	190	125	132	40	1"	1"	¾"	2	PP 45	7	4	12

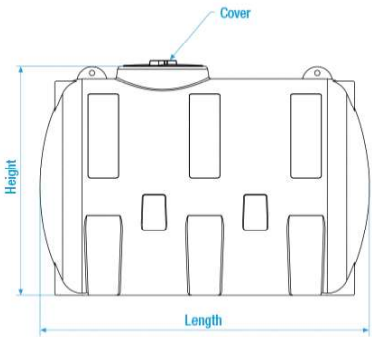

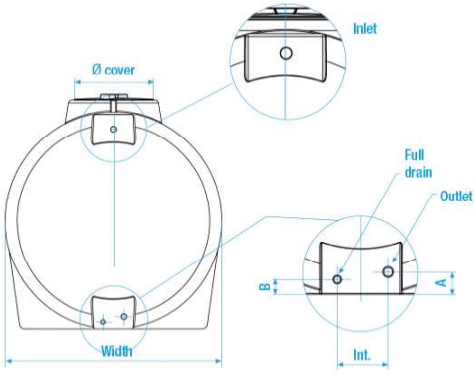

LEAF FILTER CHAMBER

Item	Ø mm	H mm	IH mm	OH mm	Ø I/O* mm	Ø cover cm
FAPI	420	780	560	60	125	30

*On request Ø I/O 110/160 mm

Application Filters out the coarse materials present in the collected rainwater (stones, leaves, tile residues, debris, etc...).

Installation Chamber in linear high density polyethylene (LLDPE), complete with PVC inlet and outlet pipes, internal filter basket in polypropylene complete with stainless steel handle for easy removal.

Use and maintenance Recommended for installation upstream of a rainwater recovery plant and nevertheless prior to a storage tank (see example on page 26). It is good practice to periodically clean the filter basket by removing the accumulated material and then washing it. At the same time, the bottom of the chamber should be checked for the presence of finer materials.

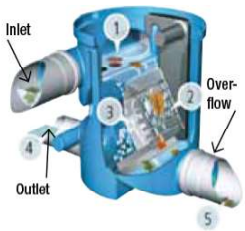

SELF - CLEANING LEAF FILTER CHAMBER

Item	Ø mm	H mm	Ø I/O mm	Ø overflow mm	Filter mesh mm	Filtered water vol. (m^3/d)	Flow rate (l/s)	Max runoff surface (m^2)
FAPIVF1	404	451	100	125	0,25x0,65	5,43	1,5	350

Application Filters out the coarse materials present in the collected rainwater (stones, leaves, tile residues, debris, etc...). The inclination of the filter cartridge allows to have 2 cleaning steps:
- separation of the coarse materials that flow to the overflow pipe;
- deep cleaning of the pre-filtered water that flows directly to the storage system.

How it works
1. As rainwater arrives, it is equally distributed across the "cascade".
2. Pre-cleaning through the grid. The coarse material is led across the primary filter directly to the overflow pipe.
3. Pre-filtered rainwater flows over the secondary filter grid. Thanks to the special self-cleaning structure, any dirt is led to the overflow, for this the filter requires few maintenance operations.
4. Cleaned water flows to the storage system.
5. Any dirt goes to the overflow.

Use and maintenance Recommended for installation upstream of a rainwater recovery plant and nevertheless prior to a storage tank. Thanks to the self-cleaning system, the maintenance operations should be carried out **twice a year** only.

Extensions

THREADED EXTENSION FOR UNDERGROUND TANKS

Item	Ø cm	H cm	Ø cover cm
PP 35	43	30	30
PP 45	53	30	40

Material High-density linear polyethylene (LLDPE).

Application Installing the extension enables the tops of the tanks to be installed below ground level. More than one extension can be used at the same time (See chapter on "Underground installation"). The thread allows the cover to be screwed into the inspection hole on top of the tank.

HINGED EXTENSION FOR UNDERGROUND TANKS

Item	Ø cm	H cm	Ø cover cm
PP 75	75	43	63

Material High-density linear polyethylene (LLDPE).

Application Installing the extension enables the tops of the tanks to be installed below ground level. More than one extension can be used at the same time (See chapter on "Underground installation"). The extension rests on the inspection hole and is fixed by pins on tank models CI10700, CI5700, CI3000, Canotto and Panettone.

TECHNICAL CHARACTERISTICS

We has designed a line of products that enable rainwater to be collected and re-used. Rainwater can be collected in tanks of volumes ranging from 1000 litres up to 10000 litres. **Larger storage volumes** can be created by connecting the tanks together using flanged joints or brass unions (see chapter MODULARITY). Rototec can supply a vast range of products for treating, storing and re-using rainwater, including leaf filter chambers, aerators to oxygenate the stored water, submersible electric pumps, etc.... Tanks equipped with electric pumps allow the stored rainwater to be pumped and re-used for irrigation, vehicle washing and, where necessary, for filling toilet cisterns and other purposes. The most frequent application is irrigation. In this respect, the company can supply electric pumps for traditional watering systems and pressure pumps for automatic systems (plants with atomisers, sprays...).

The data reported in this chapter is purely indicative. We reserves the right to modify or improve the products illustrated without prior notification. The company can make its technical office available for the design and realisation of customised products and/or for satisfying the particular needs of its clientele. Dimensional tolerance ± 3%, capacity tolerance ± 5%.

USE AND MAINTENANCE

In order for a rainwater tank to function efficiently, it is important that the most suitable pump for the specific application is selected during the design phase. For this reason, a series of technical parameters must be evaluated, such as the pumping head and pump capacity, as well as the final use of the stored water (irrigation, washing,..). Under normal operating conditions, the electric pump does not require any maintenance operations. Nevertheless, it is advisable to carry out an **inspection once a year**, during which any residues must be removed from the inlet and the condition of the power supply cable, pipes, fittings and anchoring devices checked.

REFERENCE STANDARDS

Financial Act 2008, 24-12-2007 N° 244

Article 1 – Paragraph 288. **Compulsory energy certification of buildings as from 2009** – Rainwater.

"As from 2009, pending the issue of the implementation measures provided for by art. 4 paragraph 1, of law decree n.192 of 19th August 2005, the issue of building permits is subject to the energy certification of the building, as provided for by article 6 of said law decree n. 192 of 2005, as well as the structural characteristics of the building in terms of water conservation and re-use of rainwater".

SPECIFICATION ITEMS

Rainwater harvesting system in polyethylene (PE) one-piece structure, manufactured in **ISO 9001/2008 certified company**, for underground installation, fitted with: storage tank with inlet pipe in PVC with n°2 90° elbows in PVC with watertight gasket for the dampening of the flow and overflow pipe in PVC, submersed electric pump with float and electric control/protection panel and pipe with clapet check valve for the delivery of the stored water; fitted with inspection hole (DN 630 mm) with hinged cover in PE, padlock and PP pipe union for pump vent connection; optional extension (height 40 cm) and leaf filter chamber.
Rainwater harvesting system, volume.....lt, dimensions.....x.....x.....complete with submersed electric pump mod.....

N.B.: Underground installation instructions on page 63

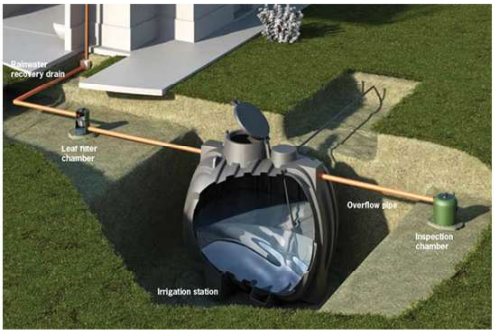

1. IRRIGATION STATIONS
2. STATIONS WITH MULTI-PURPOSE ELECTRIC PANEL

1. Irrigation stations

Material Tank in linear high density polyethylene (LLDPE), one-piece structure, complete with inlet and overflow pipes in PVC and gaskets, electric submersed pump with electric panel for pump start/stop and PP pipe union for pump vent connection.

Use Storage and delivery of between 3000 and 10000 litres of water (and higher in cases where the station is connected to other tanks – See Modularity). The submersed electric pump is used to deliver water under pressure to feed automatic irrigation systems (telescopic irrigators, sprinklers, sprayers, etc.).

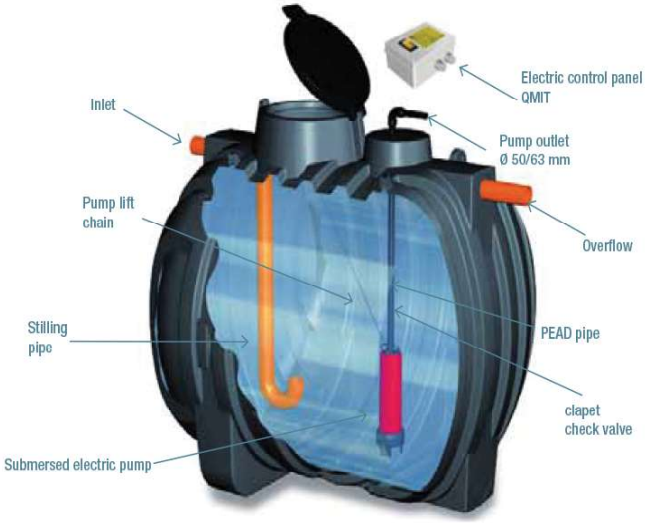

Item	Volume lt	Length cm	Width cm	Height cm	Ø I mm	Ø O mm	Ø overflow mm	Ø cover cm	Extension	Pump
SIR 3075	3000	209	150	172	125	50	125	63	PP75	SRM 09
SIR 3015	3000	209	150	172	125	63	125	63	PP75	SRM 15
SIR 5075	5000	242	192	210	125	50	125	63	PP75	SRM 09
SIR 5015	5000	242	192	210	125	63	125	63	PP75	SRM 15
SIR 10075	10000	278	243	258	125	50	125	63	PP75	SRM 09
SIR 10015	10000	278	243	258	125	63	125	63	PP75	SRM 15

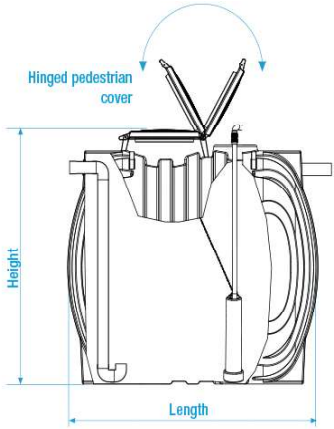

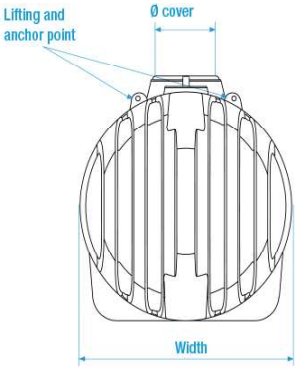

Submersed electric pump for automatic or pressurised irrigation

Technical data sheet: submersed pump for 6" wells

Material Outer casing, handle, nuts and bolts, motor and shaft casing in stainless steel; pipe union, motor and central body cover in brass; impellers and diffusers in fibreglass reinforced noryl®, certified for potable water; mechanical seal in graphite and ceramic with lubrication chamber; asynchronous motor with rotor in short-circuit mounted on ball bearings.

Application Submersed electric pump for pumping water from stormwater tanks and wells.

Use and maintenance Under normal operating conditions, the electric pump does not require any maintenance operations. It is advisable to periodically check the current absorption and delivery pressure of the pump. A current absorption higher than the nominal value can be caused by abnormal mechanical friction in the motor or pump. A reduction in delivery pressure can be caused by wear in the hydraulic components of the pump.

Item:
SRM 07 3/100
SRM 09 4/100
SRM 15 3/200

Pump model	Power		A1~ A	µF	Cable length m	DNM inches	A mm	B mm	C mm	Weight kg	Flow rate		Head m
	HP	Kw									L/min	m³/h	
SRM 07	0,7	0,5	4,2	16	10	1" 1/4	437	80	130	12	0	0	35
											100	6	9
SRM 09	0,9	0,65	5	16	10	1" 1/4	461	80	130	13,6	0	0	46
											100	6	11
SRM 15	1,5	1,1	8	40	10	2"	639	150	145	21,2	0	0	51
											220	13,2	0,5

Pump model	Max immersion depth m	Max grit concentration g/m³	Max. num. start-ups n°/h	Max water temp °C
SRM 07	20	40	20	30
SRM 09	30	40	20	30
SRM 15	20	40	20	30

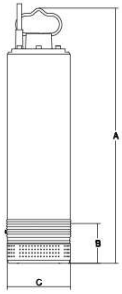

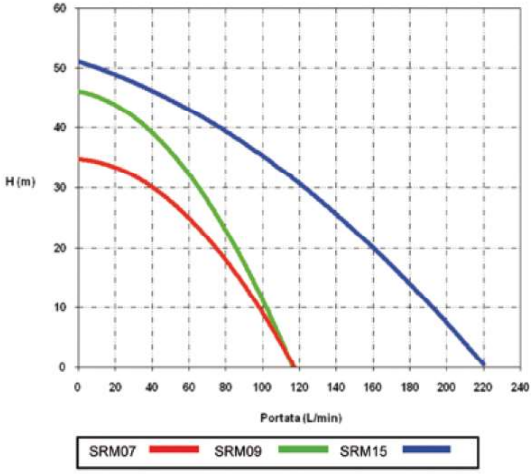

Electric panel

Single-phase electric pump protection panel

Application Safety device, fitted with two-pole thermal switch, to connect to the mains supply and electric pump feed. Guarantees interruption of pump operation in the case of an overload, i.e. in the presence of excessively heavy liquids that cause the motor to overheat. It can also be used as a manual on/off switch.

Installation In the case where the protection panel is installed outside and not protected against atmospheric agents, it should be housed in an appropriate casing or cabinet with protection grade IP55.

Constructive characteristics
- Luminous thermal switch (1)
- Box in plastic material

Item*	Height mm	Length mm	Width mm	Voltage V	Frequency Hz	Operating temperature	Protection grade
QM IT	70	150	110	230	50	-5°C/+40°C	IP40 (on request IP 55)

*in order to be able to size the thermal switches of this control panel for the selected pump, contact our technical office.

Item	Hp	Kw	A max
QM IT	0,35 - 0,5	0,26 - 0,37	3
QM IT	0,5 - 0,75	0,37 - 0,55	5
QM IT	1 - 1,2	0,75 - 0,9	7
QM IT	1,5	1,1	10
QM IT	2	1,5	12
QM IT	3	2,2	18

Aeration system

Aeration system for water storage tanks

Material Integrated system consisting of a diaphragm air compressor with electric panel and timer, connecting pipes in rubber and diffuser plate in microbored rubber.

Use A system for installation in rainwater or treated water storage tanks. Used for blowing clean air from the bottom of the tank in order to agitate and aerate the stored water, thus preventing stagnation and the resulting formation of malodours. Thanks to the electric panel and timer, the air is blown at regular intervals.

Timed electric panel mod. QST

Blower mod. HP 40

Diffuser plates mod. IFADN

Item	Blower	Electric panel	Diffuser plates	PEAD pipe
KIT AIR 40	HP 40	QST	IFADN	IFA1D

Blower HP 40

Voltage V	Frequency Hz	Nominal pressure bar		Flow rate l/min	Consumption W	Noise level db	Weight Kg
		bar	kPa				
220	50	0,128	12,8	40	38	32	5,7

Timed electric panel QST

Height mm	Length mm	Width mm	Voltage V	Frequency Hz	Operating temperature	Protection grade
120	300	220	230	50	-5° C / +40° C	IP 55

Diffuser plates IFADN

Ø mm	Weight Kg	Max air flow m^3/h	Diameter of bubbles mm	Oxygenation capacity g_{O2}/Nm^3	Active surface cm^2	Head loss bar	Working depth m	Efficiency at 5 mc/h	Max supported air temperature °C
214	2,1	5	1 - 3	18 - 20	370	0,08	0,5 - 6	7,25%	80

2. Stations with multi-purpose electric panel

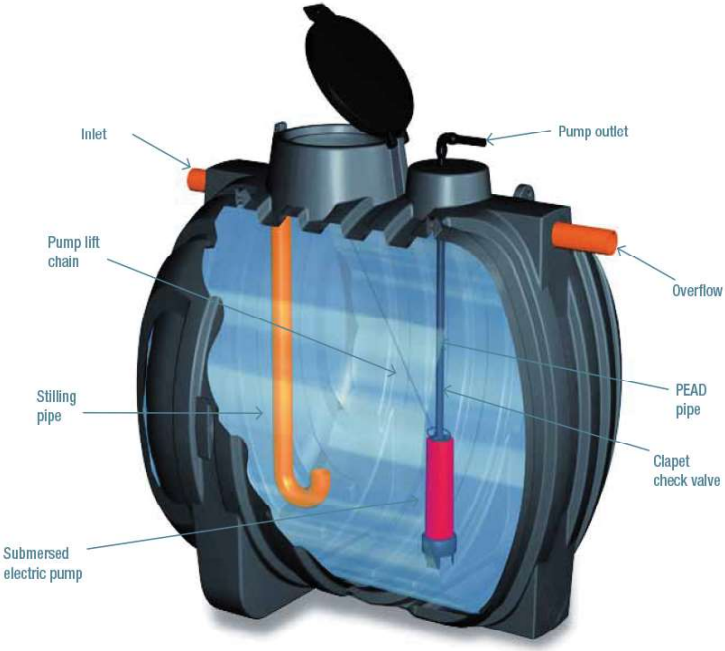

Material

tank in linear high density polyethylene (LLDPE), one-piece structure, complete with inlet and overflow pipes in PVC with gaskets, electric pump for the re-use of the stored water fitted with automatic delivery and pressurization system and multi-purpose electric panel for drinking water intake.

Application

When a rainwater storage tank is installed, it's necessary to have a pump installed to pressurize the stored water and feed all home appliances (toilets, washing machines, water taps outside buildings, domestic irrigation systems,...). If there is prolonged absence of rain, the stored water will run out so it's necessary to install a water harvesting system directly from the aqueduct to feed the domestic appliances.

For these reasons our company installs, inside the tanks, an electric pump fitted with a multi-purpose electric panel that, in the case of prolonged absence of rainfall, controls the drinking water intake. In this way the harvesting system will use the stored rainwater or the drinking water and it will never run out during dry periods.

Use

This harvesting system can be installed in every underground tank (Tank and Panettone) and it is available in different versions according to the customers' requests.

Stations with multi-purpose electric panel

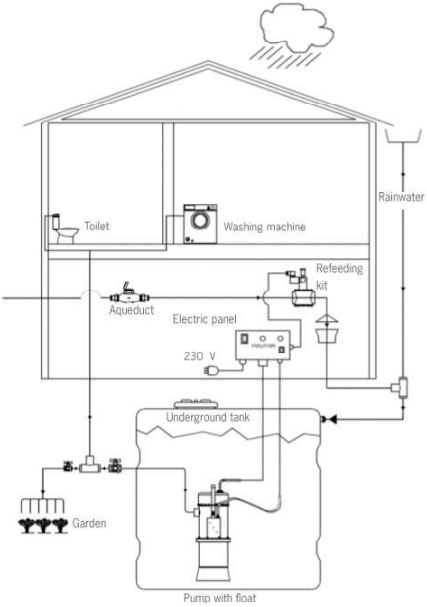

For further information and economic offers, contact our technical office.

Sizing for rainwater storage

As the population increases, so does the number of built-up areas, which leads to a higher degree of impermeability of the ground. Potential climate changes provoke an exponential increase in the demand for water, while actual potable water reserves are extremely limited.
The Earth, in fact, has **approximately 1440 million km³ of water** in the form of seas, glaciers and fresh surface and subterranean water, 97% however is unusable in that it is salt water. The remaining 3% is made up principally of glaciers (most of which are at the poles) and non-potable water, only a minute percentage **(0.3%) is available for human consumption** (Fig. 1).

Fig. 1
Water distribution

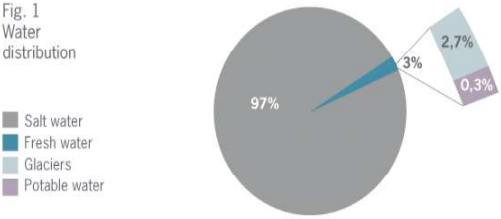

To ensure sustainable use of this precious resource, i.e. avoiding waste, rationalising its extraction and considering future generations, it is necessary to develop systems for storing and re-using rainwater in order to be able to save potable water. In terms of domestic consumption, almost half of daily water needs can be satisfied using rainwater (Fig. 2).

Fig. 2
Domestic consumption per-capita of potable water

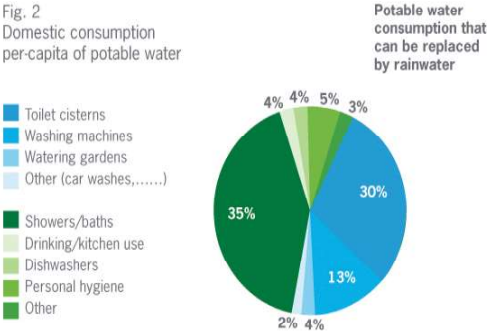

In addition to being a free commodity, it does not contain limestone or chlorine and for this reason can be stored in tanks and re-used for flushing toilets, watering gardens, washing vehicles and even for washing clothes.

The advantages offered by installing rainwater collection plants are not only enjoyed at private level but also have positive implications in the management of water resources and in the treatment of domestic sewage:

- **they prevent the sewerage system from being overloaded** in the case of high intensity rainfalls;
- **they increase the efficiency of the sewage treatment process** (in the case of combined storm and foul water sewerage systems), by eliminating high volumes of stormwater runoff which, by diluting the effluent to treat, reduce the effect of the biological/digestion treatment phase;
- **they retain and/or disperse the excess rainwater** (e.g. during heavy storms) no longer absorbed by the ground in built-up areas, which have been made almost totally impermeable, rendering any development of the public collection system pointless and ineffective.

Mean annual rainfall in Italy

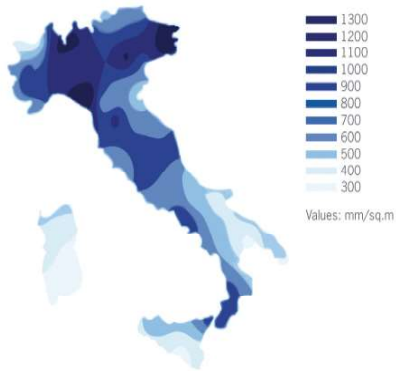

Reference and data source

Data from 4182 weather stations forming part of the national monitoring networks of the UGM, the former National Hydrographic Service and the Central Agricultural Ecology Office of the Ministry of Agriculture...

Sources:

SCIA "National Climatic/Environmental data collection, processing and distribution system of APAT". (www.scia.sinanet.apat.it)

With collaboration and meteoclimatic data from:

AM (Meteorological Service of the Military Aeronautics)
UCEA (Central Office of Agricultural Ecology)
ARPA Emilia Romagna
ARPA Friuli Venezia Giulia
ARPA Valle d'Aosta
ARPA Piemonte
ARPA Veneto
ARPA Lombardia
ARPA Liguria
ARPA Toscana
ARPA Sardegna
ARPA Basilicata

Sizing for rainwater storage

The sizing of rainwater storage tanks depends principally on two factors:
a) Amount of rainwater: indicates the theoretically accumulable quantity determined from quantity of rainfall and the characteristics of the available collection surfaces.
b) Annual water demand: indicates the necessary quantity of water according to the different demands for service water.
c) Rainwater storage volume: must be proportional to the rainfall distribution and the demand for service water. The quantity of rainwater must be made full use of in order to reduce its integration with potable water to a minimum.

a) Amount of rainwater

Amount of rainwater						
Rainfall height (mm of rain)		Collection surface (mq of roofs)		Runoff coefficient (see Table 1)		Amount of rainwater
.....mm	X	.....mq	X	.....	=	.....it

Table 1

Type of covering	Runoff coefficient
Hard pitched roof	0,9
Non-gravel flat roof	0,8
Gravel flat roof	0,6
Paved surfaces	0,5
Asphalt	0,8

b) Annual water demand

Type of activity	Annual consumption per-capita				Total consumption
Toilet flushing	9000 litres	x	.....n° of inhabitants	=	.....lt +
Washing machines	5000 litres	x	.....n° of inhabitants	=	.....lt +
Domestic cleaning	900 litres	x	.....n° of inhabitants	=	.....lt +
Watering gardens	60 litres	x	.....m²	=	.....lt =
			Annual water demand		.....lt

c) Rainwater storage volume

Storage volume						
Amount of rainwater	+	Annual water demand	=...../2	=..... X21 (days of reserve)	=...../365	=.....lt

ACCESSORIES

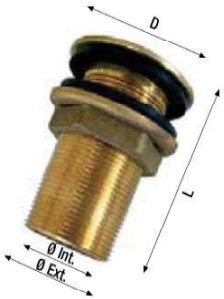

OUTLET PIPE UNION IN BRASS

Item	D mm	Ø Internal mm	Ø External inches	L mm
BSO ¾	47	19	¾"	75
BSO 1	57	25	1"	85
BSO 1 ¼	67	32	1" ¼	91
BSO 1 ½	75	38	1" ½	96
BSO 2	88	50	2"	107
BSO 2 ½	108	63	2" ½	128
BSO 3	122	76	3"	158
BSO 4	150	100	4"	209

Material
Threaded pipe union, ring nut in brass, gasket in EPDM

Application
Installed on suitable flat areas of the storage tanks, allowing them to be connected to different draw-off systems: taps, irrigation systems, pumping systems...The unions also allow the tanks to be connected together (underground or above ground) to obtain extremely large storage volumes.

Installation
Carefully follow the instructions supplied (see page 22).
On request, we can supply tanks with pipe unions already installed.

Warnings
- Only fit the unions to the flat areas provided on the tanks;
- Not all the pipe unions indicated can be installed on the tanks. For more information on the applicability of the pipe union of interest, contact our technical office;
- Many tanks are already provided with full drain and outlet holes.

PE FLANGED JOINT

Item	Ø Internal mm	Ø External mm	Thickness mm	L mm	L[1] mm	Ø Flange mm
GF 90	80	90	5	150	115	160
GF 125	100	125	12,5	180	140	185
GF 160	130	160	15	195	155	225

Material
Long spigot stub end in polyethylene PN10, flanges, bolts and nuts in steel, washers in brass and gaskets in EPDM.

Application
The flanged joints allow the tanks to be connected together (underground or above ground) to obtain extremely large storage volumes.

Installation
Carefully follow the instructions supplied (see page 22).
On request, we can supply tanks with flanged joints already installed.

Warnings
- Only fit the flanged joints to the flat areas provided on the tanks;
- Not all the flanged joints indicated can be installed on the tanks. For more information on the applicability of the flanged joint of interest, contact the Rototec technical office;

Accessories

COVER*

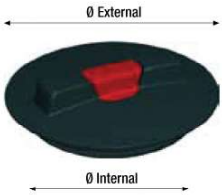

Item	Ø Internal cm	Ø External cm
CS 255	21	25
CS 355	30	35
CS 455	40	45
TAP 600	52	67
TAP 700	63	80

* The tanks are fitted with covers at the time of purchase.

Material
Polypropylene (CS 255, CS 355, CS 455) and linear polyethylene (TAP 600, TAP 700)

Application
Threaded cover for inspection holes on the tanks. Manufactured in accordance with current pollution prevention standards, the cover is fitted with a dual venting valve system that allows the tanks to be drained rapidly with the covers closed, including by high capacity pumps. Hinged cover in polyethylene (TAP 700), fixed by pins on the inspection hole of the tanks.

FRESH WATER FLOAT SWITCH

Item	Float dimensions mm	Cable length m
GAL 5	80 x 100 x 40	5

Material
PVC cable

Application
Float level switch for fresh water pump start/stop.

Installation
To be installed in accordance with DPR 547 and subsequent amendments and according to the standard CEEel-N24 and subsequent amendments.

Warnings
10(4) A - 250 V - IP 67 T 60

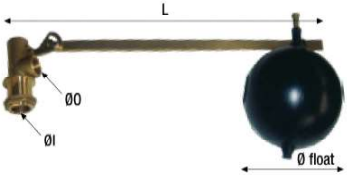

FLOAT VALVE

Item	Ø I inches	Ø O inches	L mm	Ø float mm
RAG	1"	1"	400	120

Material
Valve and float rod in brass, ball float in polypropylene.

Installation
The valve is installed in the appropriate fill holes in the tanks.

Application
The movement of the ball float ensures that the valve opens and closes automatically when the water in the tank reaches a certain level. The inclination of the rod and the position of the float can be adjusted to regulate the required valve opening and closing level.

DIFFUSER KIT

Item	Cable length mm
IFA 1D	according to the depth of the tank
IFA 2D	according to the depth of the tank

Material
PVC hose, polypropylene valve.

Warnings
Before starting the blower, make sure that the valve is in the open position.

Application
When connected to a diaphragm type blower and to one or more diffuser plates and installed inside a tank, aerates and agitates the content, either continuously or intermittently.

RING

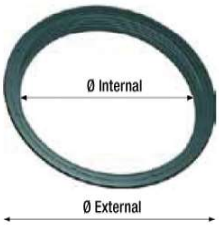

Item	Ø External mm	Ø Internal mm	H ring mm
AF 154	155	110	10
AF 255	255	190	30
AF 355	355	285	30
AF 455	455	380	30

Material
Polypropylene.

Application
Installed when creating customised inspection holes.

Accessories

GASKET

Item	Ø External mm	Ø Internal mm	L mm	cutter Ø for gasket hole mm
GG 50	95	50	8	60
GG 63	110	63	8	75
GG 80	125	80	8	89
GG 100	145	100	8	121
GG 110	150	110	8	127
GG 125	160	125	10	140
GG 125 S 15	160	125	13	140
GG 160	200	160	10	170
GG 200	230	200	10	210
GG 250	280	250	10	260

Material
NBR rubber

INCREASERS AND REDUCERS

Increaser in PVC	Item
	RAC 110/125
	RAC 100/110
	RAC 100/125

Reducer in PVC	Item
	RRC 110/100
	RRC 125/100
	RRC 125/110

FILTER BASKET

Item	Ø mm	H mm	Mesh width mm
CF	280 - 300	240	1

Material
Support and mesh in polypropylene, steel handle.

Application
Installed in the appropriate chamber (FAPI), it filters out the coarse materials present in the collected rainwater (stones, leaves, tile residues, debris, etc...). The filter basket is fitted with a stainless steel handle to facilitate its removal from the chamber for cleaning.

EXTERNAL LEVEL INDICATOR

Item	Ø hose mm	Pipe length
IL	15	according to the height of the tank

Material
Hoses in rubber and fittings in polypropylene.

Application
Installed on the outside of storage tanks and used for monitoring the level of liquid.

Warnings
When installed on the tank, part of the liquid will be irradiated by sunlight. This could lead to the development of algae. Consequently, it is not advisable to install the level indicator in cases where the tank is used to store potable water.

Accessories

ELECTRO-WELDABLE COUPLING IN PE PN 10

Item	Ø Internal mm	Ø External mm	L mm
MAN 90	90	113	130
MAN 125	125	155	156
MAN 160	160	198	178

Material
Manufactured by injection moulding high density polyethylene, dimensions in accordance with standard UNI 8850+F.A.1- EN 12201 - EN 1555 – M. D. n. 174 of 06/04/04.

Application
For full welding of flanged joints to polyethylene pipe, enabling two tanks to be connected together to provide large storage volumes.

PE PIPE

Item	Ø External mm	L mm
TUBO 90	90	500
TUBO 125	125	500
TUBO 160	160	500

Material
Polyethylene PN 10.

Application
Welded to the appropriate couplings and unions installed on the tanks, enables two tanks to be connected together to provide large storage volumes.

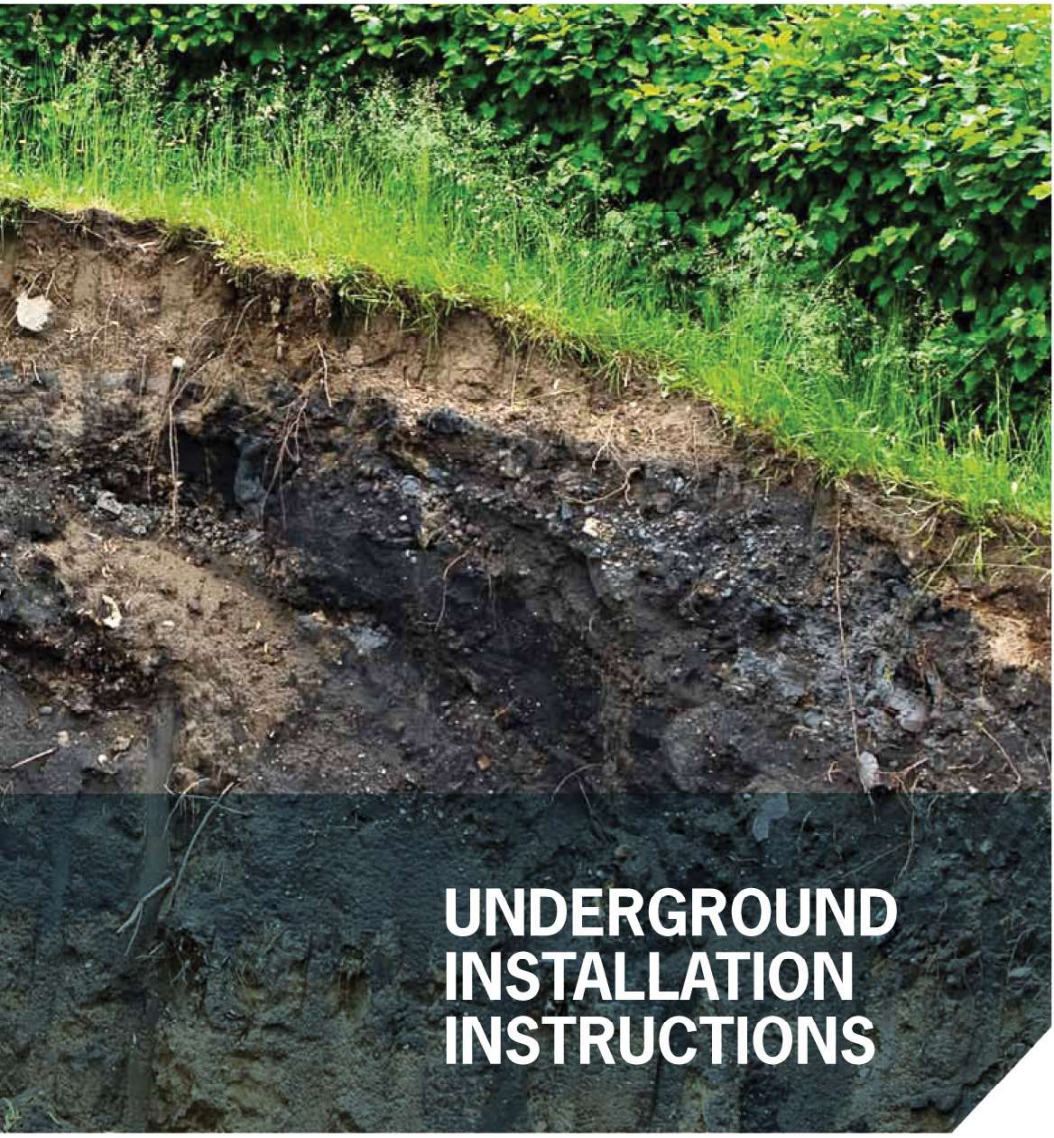

UNDERGROUND INSTALLATION INSTRUCTIONS

Precautions

a) When carrying out any of the operations, comply with **Law Decree 81/08** and subsequent amendments governing safety at permanent or temporary construction sites.
b) Thoroughly check the tank on delivery and report any defects encountered.
c) Make sure that the gaskets, pipes and all the various parts other than in polyethylene are suitable for the liquid to be contained.
d) When unloading, **avoid** impacts and contact with sharp objects that could compromise the integrity of the product.
e) Only handle the tanks when they are **completely empty** and then using the lifting eyes (where provided).
f) **NEVER** lift the tanks by the inlet or outlet pipes.
g) For the choice of backfill material and compaction methods, refer to European Standards ENV 1046 and UNI EN 1610.

Warnings

a) **It is absolutely forbidden** to install underground tanks above ground.
b) **It is severely prohibited** to use the tank for storing industrial waste or liquids.
c) Underground tanks **are NOT suitable and must NOT be used** for storing diesel fuel.

1. EXCAVATION

Prepare a hole of suitable dimensions with a flat bottom, leaving a space of at least **30/40 cm** around the tank. In the case of heavy ground (e.g.: clayey subsoil) and/or groundwater, the distance must be at least 50 cm. Spread a layer of sand on the bottom of the excavation of **minimum depth 15 cm** to allow the tank to rest on a uniform and level base. The excavation must be a minimum of 1 m from any structures.

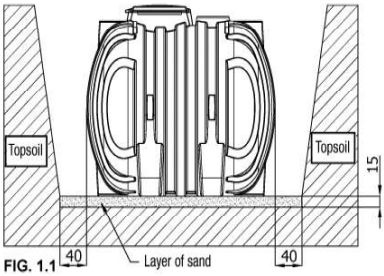

FIG. 1.1

2. BACKFILL AND FILLING

2.1 Place the **totally empty tank** on the bed of sand at the bottom of the hole, gradually fill the tank with water and at the same time support it by backfilling with sand: proceed with successive layers of **15/20 cm**, first filling the tank and then backfilling with compacted sand. **NEVER** use material with sharp edges.

N.B. For installation in more severe conditions (groundwater, clay soils or in sloping ground), refer to paragraphs 2.6, 2.7 and 2.8

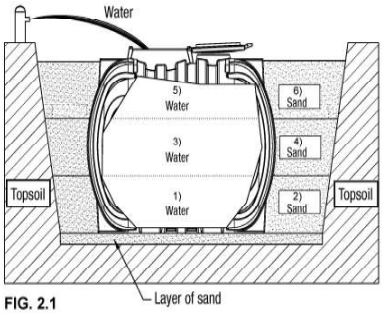

FIG. 2.1

2.2 After the tank had been filled and the hole suitably backfilled, gradually cover with topsoil to a depth of **20/30 cm**, leaving the inspection covers exposed. In this way, the area concerned is suitable for **pedestrian traffic**, while the transit of motor vehicles **within 2m of the excavation** is prohibited.

N.B. To render the site trafficable by motor vehicles, refer to chapter 3.

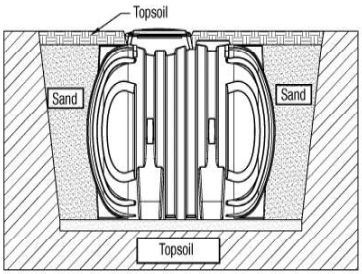

FIG. 2.2

Underground installation instructions

2.3 EXTENSION INSTALLATION

If the tank is installed **at a depth of 40 cm** and the site is to remain open to pedestrian traffic, it is advisable to install the **Rototec polyethylene extensions** directly on the inspection hole. In the case where the tank is installed deeper than that previously indicated, which constitutes an unfavourable condition and not recommended by Rototec, adhere scrupulously to the instructions reported in **chapter 3 "Trafficability".** The technician responsible for the installation will follow the instructions reported in the two paragraphs according to the installation depth.

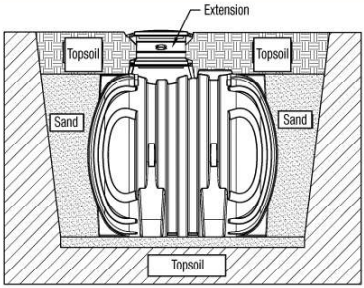

FIG. 2.3

2.4 PUMP INSTALLATION

When installing a pump, internally or externally, make sure that the **vent is free** and correctly sized to prevent the formation of a vacuum when the pump is running. Then, make the connections and check them.

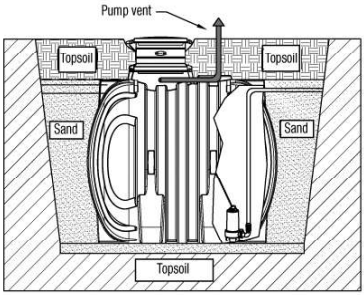

FIG. 2.4

2.5 MANHOLES INSTALLATION

The installation of manholes or covers of **weight exceeding 50 kg** must always be solid with the **concrete slab** designed to allow a uniformly distributed load on the tank. Avoid constructions in brickwork which would compromise maintenance and/or eventual replacement of the tank itself.

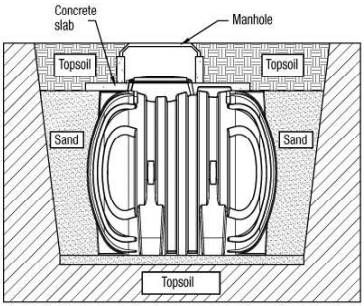

FIG. 2.5

2.6 INSTALLATION IN ZONES WITH GROUNDWATER

Installation in the presence of **groundwater** represents one of the riskiest conditions for a storage tank. In this case, it is advisable to obtain a **geotechnical report** from a specialist. From the report, the installation technician will be able to define the expected pressure from the groundwater and design the backfill material and slab accordingly. In particular, he will design the backfill to have the necessary capacity for resisting the high lateral forces. The resistance capacity can be increased by inserting an electro-welded wire mesh. After having constructed the **concrete slab** at the bottom of the excavation, a 10 cm thick layer of sand must be spread over the top to fill in the voids between the corrugations in the base of the tank. The tank filling and backfilling operations must always be carried out **progressively**. It is advisable, therefore, to half fill the tank and at the same time backfill with **reinforced concrete** and allow it to stand for **24/36 hours** [Fig. 2.6 points 1 and 2]. After which, complete the tank filling and the backfill [Fig. 2.6 points 3 and 4].

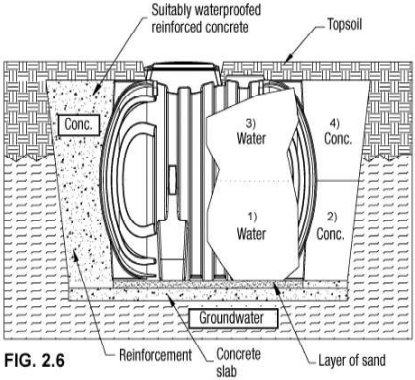

FIG. 2.6

2.7 INSTALLATION IN ZONES WITH CLAYEY SOIL

Installing an underground storage tank in areas with **clay subsoil** represents another unfavourable condition for the tank. A **geotechnical report** prepared by a specialist is advisable in this case also. From the report, the installation technician will be able to define the expected **ground pressure** (high in the case of clayey soil) and design the backfill accordingly. In particular, the bottom of the excavation must be covered by a bed of finely crushed stone or fine gravel (diameter **5/8 mm**) and the sides of the tank backfilled with gravel (diameter **20/30 mm**).The tank filling and backfilling operations must always be carried out progressively as previously specified (See para. 2.1). It is also advisable to install a **drainage system** at the bottom of the excavation.

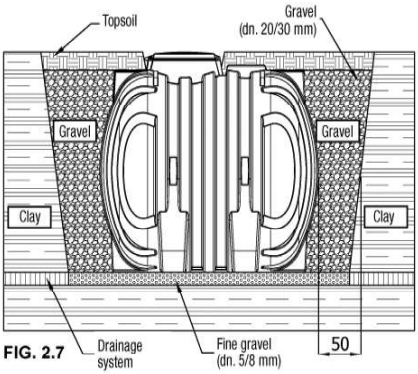

FIG. 2.7

2.8 INSTALLATION NEAR TO SLOPING GROUND

When the tank is to be installed near to a **slope** or on sloping ground, the tank must be protected by a **reinforced concrete retaining wall,** appropriately designed by a specialist, in order to balance the lateral thrust of the ground and to protect the area from possible infiltration. The tank filling and backfilling operations must always be carried out progressively as previously specified (See para. 2.1).

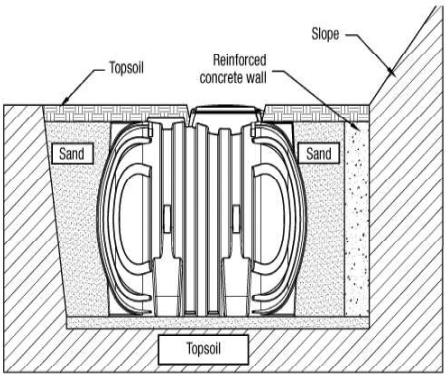

FIG. 2.8

Underground installation instructions

3 TRAFFICABILITY

3.1 LIGHT TRAFFIC - CLASS B125-EN124/95 - MAX 12,5 TONS

To render the site suitable for the **transit of light vehicles**, a **self-supporting reinforced concrete slab**, designed in relation to the load, must be constructed. The perimeter of the slab must be larger than the tank excavation to prevent the weight of the slab from bearing on the tank itself. It is advisable to also construct a 15/20 cm **concrete slab** at the bottom of the excavation, over which a 10 cm thick layer of sand must be spread to fill in the voids between the corrugations in the base of the tank. The self-supporting slab in reinforced concrete and the bottom concrete slab must always be designed by a qualified professional. The tank filling and backfilling operations must always be carried out progressively as previously specified (See para. 2.1).

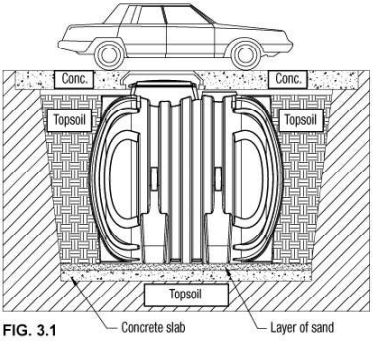

FIG. 3.1

3.2 HEAVY TRAFFIC - CLASS D400-EN124/95 - MAX 40 TONS

To render the site suitable for the **transit of heavy vehicles**, a **reinforced concrete containment structure** cast on-site with a suitable **concrete cover slab** must be provided. The perimeter of the slab must be larger than the tank excavation in order to distribute the load on the containment walls and not on the tank itself. It is advisable to spread a 10 cm thick layer of sand at the bottom of the containment structure to fill in the voids between the corrugations in the base of the tank. The containment structure and top slab must be designed by a qualified professional in relation to the expected loads. The tank filling and backfilling operations must always be carried out progressively as previously specified (See para. 2.1).

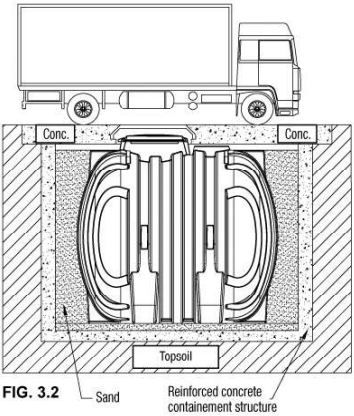

FIG. 3.2

4. MODULARITY

In the case where a number of underground tanks are to be connected in series or in parallel to obtain storage volumes greater than 20 cu.m, a suitable **concrete base slab** must be provided. For all other installation operations, carefully follow the instructions previously reported.

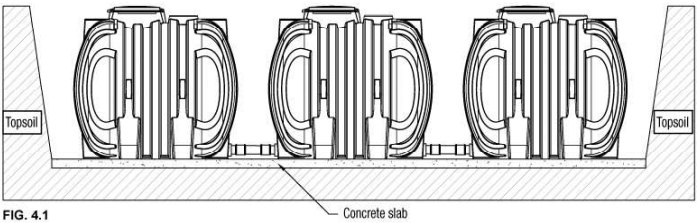

FIG. 4.1

Declaration of conformity

TABLE OF RESISTANCE OF THE TANKS TO SOME FLUIDS AND REAGENTS

Item	23°	60°	Item	23°	60°	Item	23°	60°	Item	23°	60°
Vinegar	R	R	Amyl chloride	R	R	Ferrous nitrate (ico)	R	R	Potassium persulphate	R	R
Acetic acid (10%)	R	R	Ammonia (100% gas)	R	R	Ferrous sulphate (oso)	R	R	Potassium sulphate (conc.)	R	R
Acetic acid (50%)	R	LR	Ammonium carbonate	R	R	Bisodium phosphate	R	R	Potassium sulphite (conc.)	R	R
Arsenic acid (all conc.)	R	R	Ammonium chloride (sat. sol.)	R	R	Sodium phosphate (tri)	R	R	Potassium sulphide (conc.)	R	R
Ascorbic acid (10%)	R	R	Ammonium fluoride (sat.sol.)	R	R	Fructose	R	R	Propylene dichloride (100%)	NR	NR
Benzoic acid (all conc.)	R	R	Ammonium hydrate (10%)	R	R	Furfural	NR	NR	Propylenglycol	R	R
Boric acid (all conc.)	R	R	Ammonium hydrate (30%)	R	R	Diesel vehicle fuel *	R	R	Copper cyanide (sat.)	R	R
Bromidic acid (50%)	R	R	Ammonium nitrate (sat. sol.)	R	R	Diesel domestic fuel *	R	R	Copper chloride (sat.)	R	R
Butyric acid (all conc.)	NR	NR	Ammonium persulphate (sat. sol.)	R	R	Glycerine	R	R	Copper fluoride (2%)	R	R
Carbonic acid	R	R	Ammonium sulphate (sat. sol.)	R	R	Triethylene glycol	R	R	Copper nitrate (sat.)	R	R
Hydrocyanic acid	R	R	Acetic anhydride	NR	NR	Glycol	R	R	Copper sulphate (sat.)	R	R
Citric acid (sat.)	R	R	Carbonic anhydride	R	R	Ethylene glycol	R	R	Resorcinol	R	R
Hydrochloric acid (dry gas)	R	R	Aniline	NR	NR	Glucose	R	R	Brine	R	R
Hydrochloric acid (all conc.)	R	R	Silver nitrate (sol.)	R	R	Aromatic hydrocarbons	NR	NR	Diazo salts	R	R
Chlorosulphonic acid (100%)	NR	NR	Air	R	R	Hydroquinone	R	R	Cider	R	R
Diglycolic acid	R	R	Barium carbonate (sat. sol.)	R	R	Hydrogen	R	R	Sodium acetate	R	R
Fluoboric acid	R	R	Barium chloride (sat. sol.)	R	R	Ink	R	R	Sodium benzoate (35%)	R	R
Fluorhydric acid (40%)	R	R	Barium hydrate	R	R	Iodine (sol. in KI)	LR	NR	Sodium bicarbonate	R	R
Fluorhydric acid (60%)	R	R	Barium sulphate (sat. sol.)	R	R	Milk	R	R	Sodium bichromate	R	R
Fluosilicic acid	R	LR	Barium sulphide (sat. sol.)	R	R	Photograph developer liquids	R	R	Sodium bisulphate	R	R
Fluosilicic acid (30%)	R	R	Benzene	NR	NR	Lye (10%)	R	R	Sodium bisulphite	R	R
Formic acid (all conc.)	R	R	Petrol	NR	NR	Yeast	R	R	Sodium borate	R	R
Gallic acid	R	R	Beer	R	R	Magnesium carbonate	R	R	Sodium bromide	R	R
Glycolic acid	R	R	Bismuth carbonate (sat. sol.)	R	R	Magnesium chloride	R	R	Sodium carbonate	R	R
Hypochlorous acid	R	R	Borax	R	R	Magnesium hydroxide	R	R	Sodium cyanide	R	R
Nitric acid (30%)	R	R	Boron trifluoride	R	R	Magnesium nitrate	R	R	Sodium chlorate	R	R
Nitric acid (50%)	R	LR	Bromine (liquid)	NR	NR	Magnesium sulphate	R	R	Sodium chloride	R	R
Nitric acid (70%)	R	LR	Butandiol (100%)	R	R	Mercury	R	R	Sodium ferrocyanide	R	R
Nitric acid (95%)	NR	NR	Butandiol (10%)	R	R	Methylene chloride (100%)	LR	NR	Sodium fluoride	R	R
Oxalic acid	R	R	Butandiol (50%)	R	R	Naphtha	LR	NR	Sodium hydroxide	R	R
Salicylic acid	R	R	Butylacetate	NR	NR	Naphthalene	NR	NR	Sodium hypochlorite	R	R
Selenic acid	R	R	Coffe	R	R	Nickel chloride	R	R	Sodium nitrate	R	R
Sulfidic acid	R	R	Calcium bisulphite	R	R	Nickel nitrate	R	R	Sodium sulphate	R	R
Sulphuric acid (humate)	NR	NR	Calcium carbonate (sat. sol.)	R	R	Nickel sulphate	R	R	Sodium sulphite	R	R
Sulphuric acid (10%)	R	R	Calcium chlorate (sat. sol.)	R	R	Nicotine (diluted)	R	R	Sodium sulphide	R	R
Sulphuric acid (50%)	R	R	Calcium chloride (sat. sol.)	R	R	Nitrobenzene	NR	LR	Carbon disulphide	NR	NR
Sulphuric acid (70%)	R	LR	Calcium hydrate (all conc.)	R	R	n-Heptane	LR	LR	Soap solutions (all conc.)	R	R
Sulphuric acid (80%)	R	NR	Calcium nitrate (50%)	R	R	n-Octane	R	R	Photographic solutions	R	R
Sulphuric acid (96%)	LR	NR	Calcium oxide (sat. sol.)	R	R	Mineral oils	R	LR	Silver plating solution	R	R

Declaration of conformity

R = Resistant / LR = Limited Resistance / NR = No Resistance

Item	23°	60°	Item	23°	60°	Item	23°	60°	Item	23°	60°
Sulphuric acid (98%)	LR	NR	Calcium sulphate	R	R	Camphor oil	LR	NR	Cadmium plating solution	R	R
Sulphurous acid	R	R	Carbon tetrachloride	LR	NR	Cotton seed oil	R	R	Nickel plating solution	R	R
Stearic acid	R	R	Liquid chlorine	NR	NR	Corn oil	R	R	Gold plating solution	R	R
Tannic acid	R	R	Chlorine (100% dry gas)	LR	NR	Castor oil (all conc.)	R	R	Brass plating solution	R	R
Water	R	R	Chlorobenzene	NR	NR	Olive oil	R	NR	Lead plating solution	R	R
Seawater	R	R	Cola concentrates	R	R	Perchlorethylene	NR	NR	Tin plating solution	R	R
Nitromuriatic acid	NR	NR	Dextrin	R	R	Lead acetate	R	R	Zinc plating solution	R	R
Turpentine	LR	LR	Dextrose	R	R	Lead nitrate	R	R	Tin chloride (ico)	R	R
Wetting agents	R	R	Dextrose (sat. aqueous sol.)	R	R	Pyridine	R	R	Tin chloride (oso)	R	R
Amyl alcohol	R	R	Synthetic detergents	R	R	Fruit pulp	R	R	Tetrahydrofuran	LR	NR
Butyl alcohol	R	R	Dibutyl phthalate	LR	LR	Potassium bicarbonate	R	R	Titanium tetrachloride	NR	NR
Coconut oil alcohol	R	R	Dicholoro ethane	NR	NR	Potassium bromide	R	R	Toluene	LR	LR
Ethyl alcohol	R	R	Dichlorobenzene (veg. and para)	NR	NR	Potassium carbonate	R	R	Trichloroethylene	NR	NR
Ethyl alcohol (35%)	R	R	Diethyl ketone	LR	LR	Potassium cyanide	R	R	Urea (30%)	R	R
Furfural alcohol	LR	LR	Diethylene glycol	R	R	Potassium chlorate	R	R	Vanilla	R	R
Methyl alcohol (100%)	R	R	Dimethylamine	NR	NR	Potassium chloride	R	R	Wines	R	R
Propargylic alcohol	R	R	Photographic emulsifiers	R	R	Potassium chromate (40%)	R	R	Wisky	R	R
Propylic alcohol	R	R	Hexachlorobenzene	R	R	Potassium dichromate (40%)	R	R	Xylene	NR	NR
Acetic aldehyde	LR	NR	Hexanol (tertiary)	R	R	Potassium hexacyanoferrate II	R	R	Zinc bromide	R	R
Alum (all types)	R	R	Ethyl ether	NR	NR	Potassium hexacyanoferrate III	R	R	Zinc carbonate	R	R
Aluminium chloride (all conc.)	R	R	Ethyl acetate	LR	NR	Potassium fluoride	R	R	Zinc chloride	R	R
Aluminium fluoride (all conc.)	R	R	Ethyl benzene	NR	NR	Potassium hydroxide (conc.)	R	R	Zinc oxide	R	R
Aluminium sulphate (all conc.)	R	R	Ethyl chloride	NR	NR	Potassium nitrate	R	R	Zinc sulphate	R	R
Starch (sat. sol.)	R	R	Ferrous chloride (ico)	R	R	Potassium perchlorate (10%)	R	R	Zinc stearate	R	R
Amyl acetate	NR	NR	Ferrous chloride (oso)	R	R	Potassium permanganate (20%)	R	R			

We herewith declare that our polyethylene tanks are suitable for storing diesel fuel, as reported in the above polyethylene compatibility table. The information reported in this table is purely indicative, in that the resistance of the products against chemical agents is also influenced by their form and by the conditions of use. It is well known that an increase in temperature always results in an increase in the aggressive nature of the substance stored in the tank. Consequently, for all the above fluids, if the working temperature is near to 70° C, prior to using the tank, the customer must always carry out a test using a sample of the material, in that in these cases, We are unable to offer precise guarantees or assume any responsibility. It is nevertheless advisable to contact our technical office beforehand.

For further information, contact our sales office:
some of the mentioned agents may require special connections or gaskets.

N.B.: when storing liquids other than water, take into account the differences in specific weight.

*** The tanks do not have Fire Service type-approval for containing diesel fuel.**

SEWAGE TREATMENT DIVISION

WATER DIVISION

INFINITANK

GARDEN DIVISION

Mediterranea Commerciale